JVC

SERVICE MANUAL

CD CHANGER SYSTEM

PC-X1000 B/E

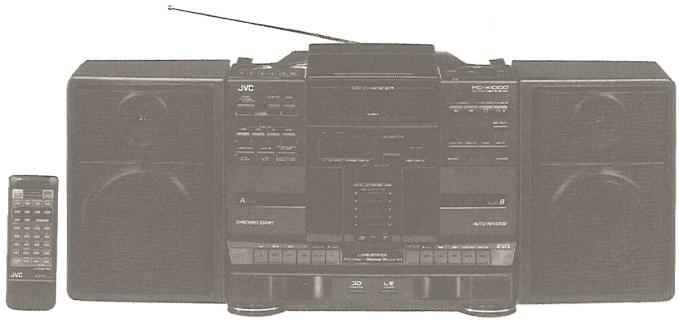

COMPACT disc DIGITAL AUDIO

Area suffix

B ..... U.K.
E ..... Continental Europe

Contents

		Page
1	Safety Precautions	2
2	Safety Precautions about PC-X1000	3
3	Features	5
4	Specifications	5
5	Instruction Book (Extract)	6
6	Location of Main Parts	18
7	Removal of Main Parts	24
8	Main Adjustments	36
9	Block Diagram	52
10	Standard Schematic Diagram	54
11	Wiring Connections	59
12	Location of P.C. Board Parts	61
13	Exploded View of Enclosure Component Parts	66
14	Exploded View of CD Changer Mechanism Component Parts	70
15	Exploded View of Cassette Mechanism Component Parts	72
16	Packing Illustration and Packing Parts	78
	Electrical Parts List	79

No. 1790
May 1990

1 Safety Precautions

1. The design of this product contains special hardware and many circuits and components specially for safety purposes. For continued protection, no changes should be made to the original design unless authorized in writing by the manufacturer. Replacement parts must be identical to those used in the original circuits. Service should be performed by qualified personnel only.
2. Alterations of the design or circuitry of the product should not be made. Any design alterations of the product should not be made. Any design alterations or additions will void the manufacturer's warranty and will further relieve the manufacturer or responsibility for personal injury or property damage resulting therefrom.
3. Many electrical and mechanical parts in the product have special safety-related characteristics. These characteristics are often not evident from visual inspection nor can the protection afforded by them necessarily be obtained by using replacement components rated for higher voltage, wattage, etc. Replacement parts which have these special safety characteristics are identified in the Parts List of Service Manual. Electrical components having such features are identified by (⚠) on the schematic diagram and Parts List in Service Manual. The use of a substitute replacement which does not have the same safety characteristics as the recommended replacement part shown in the Parts List in Service Manual may create shock, fire, or other hazards.
4. The leads in the products are routed and dressed with ties, clamps, tubings, barriers and the like to be separated from live parts, high temperature parts, moving parts and/or sharp edges for the prevention of electric shock and fire hazard.
   When service is required, the original lead routing and dress should be observed, and it should be confirmed that they have been returned to normal, after re-assembling.
5. Leakage current check (Electrical shock hazard testing)
   After re-assembling the product, always perform an isolation check on the exposed metal parts of the product (antenna terminals, knobs, metal cabinet, screw heads, headphone jack, control shafts, etc.) to be sure the product is safe to operate without danger of electrical shock.
   Do not use a line isolation transformer during this check.
   - Plug the AC line cord directly into the AC outlet. Using a ''Leakage Current Tester'', measure the leakage current from each exposed metal part of the cabinet, particularly any exposed metal part having a return path to the chassis, to a known good earth ground. Any leakage current must not exceed 0.5 mA AC (r.m.s.).
   - Alternate check method
     Plug the AC line cord directly into the AC outlet. Use an AC voltmeter having 1,000 ohms per volt or more sensitivity in the following manner. Connect a 1,500 Ω 10 W resistor paralleled by a 0.15 μF AC-type capacitor between an exposed metal part and a known good earth ground.
     Measure the AC voltage across the resistor with the AC voltmeter.
     Move the resistor connection to each exposed metal part, particularly any exposed metal part having a return path to the chassis, and measure the AC voltage across the resistor. Now, reverse the plug in the AC outlet and repeat each measurement. Any voltage measured must not exceed 0.75 V AC (r.m.s.).
     This corresponds to 0.5 mA AC (r.m.s.).

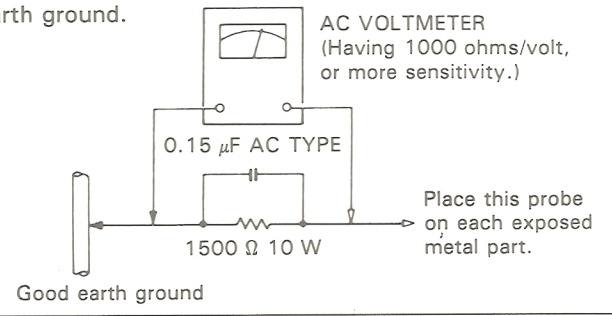

WARNING:
TO REDUCE THE RISK OF FIRE OR ELECTRIC SHOCK, DO NOT EXPOSE THIS APPLIANCE TO RAIN OR MOISTURE.

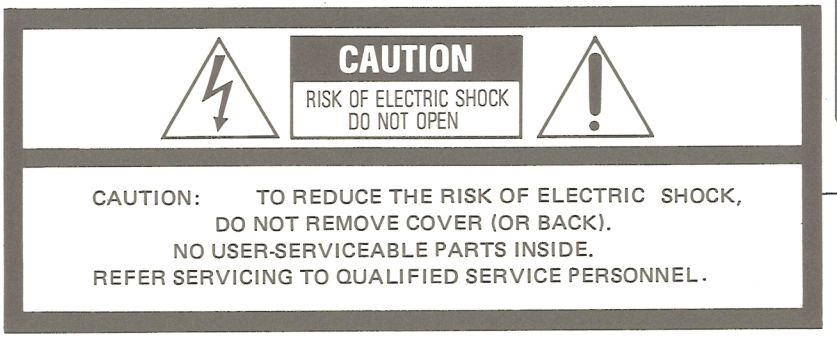

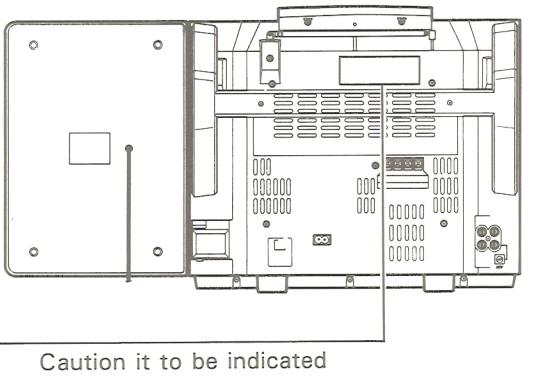

Caution it to be indicated on rear cabinet.

2 Safety Precautions about PC-X1000

Important for Laser Products (Precautions)

1. CLASS 1 LASER PRODUCT
2. DANGER: Invisible laser radiation when open and interlock failed or defeated. Avoid direct exposure to beam.
3. CAUTION: Do not open the top and rear cover. There are no user serviceable parts inside the unit, leave all servicing to qualified service personnel.
4. CAUTION: The compact disc player uses invisible laser radiation and is equipped with safety switches which prevent emission of radiation when unloading the CD magazine and the safety interlocks have failed or are defeated. It is dangerous to defeat the safety switches.
5. CAUTION: Use of controls or adjustments or performance of procedures other than those specified herein may result in hazardous radiation exposure.

REPRODUCTION OF LABELS AND THEIR LOCATION

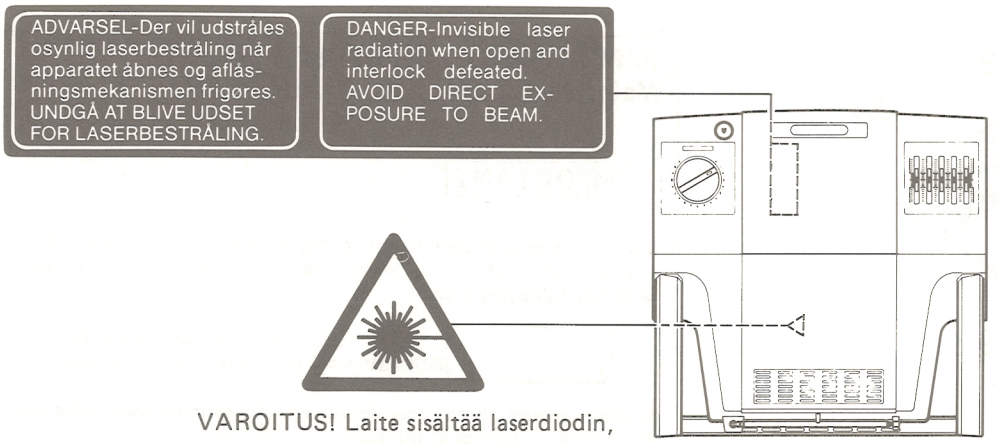

VAROITUS! Laite sisältää laserdiodin, joka lähettää näkymätätöntä silmille vaarallista lasersäteilya.

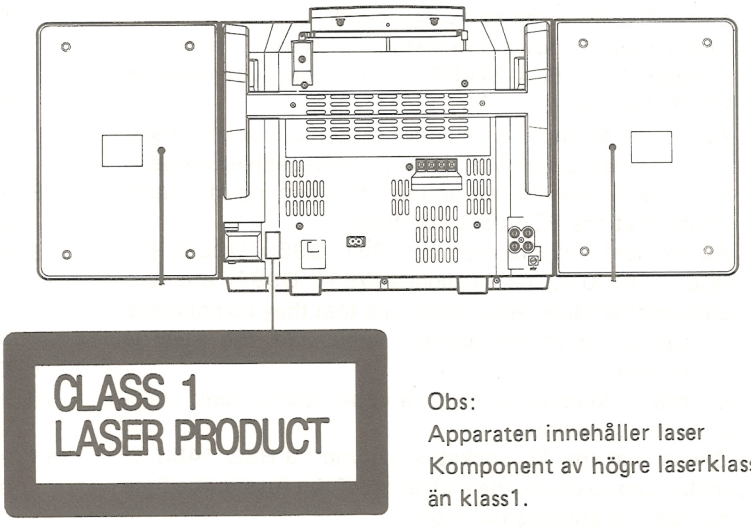

Obs:
Apparaten innehåller laser
Komponent av högre laserklass
än klass1.

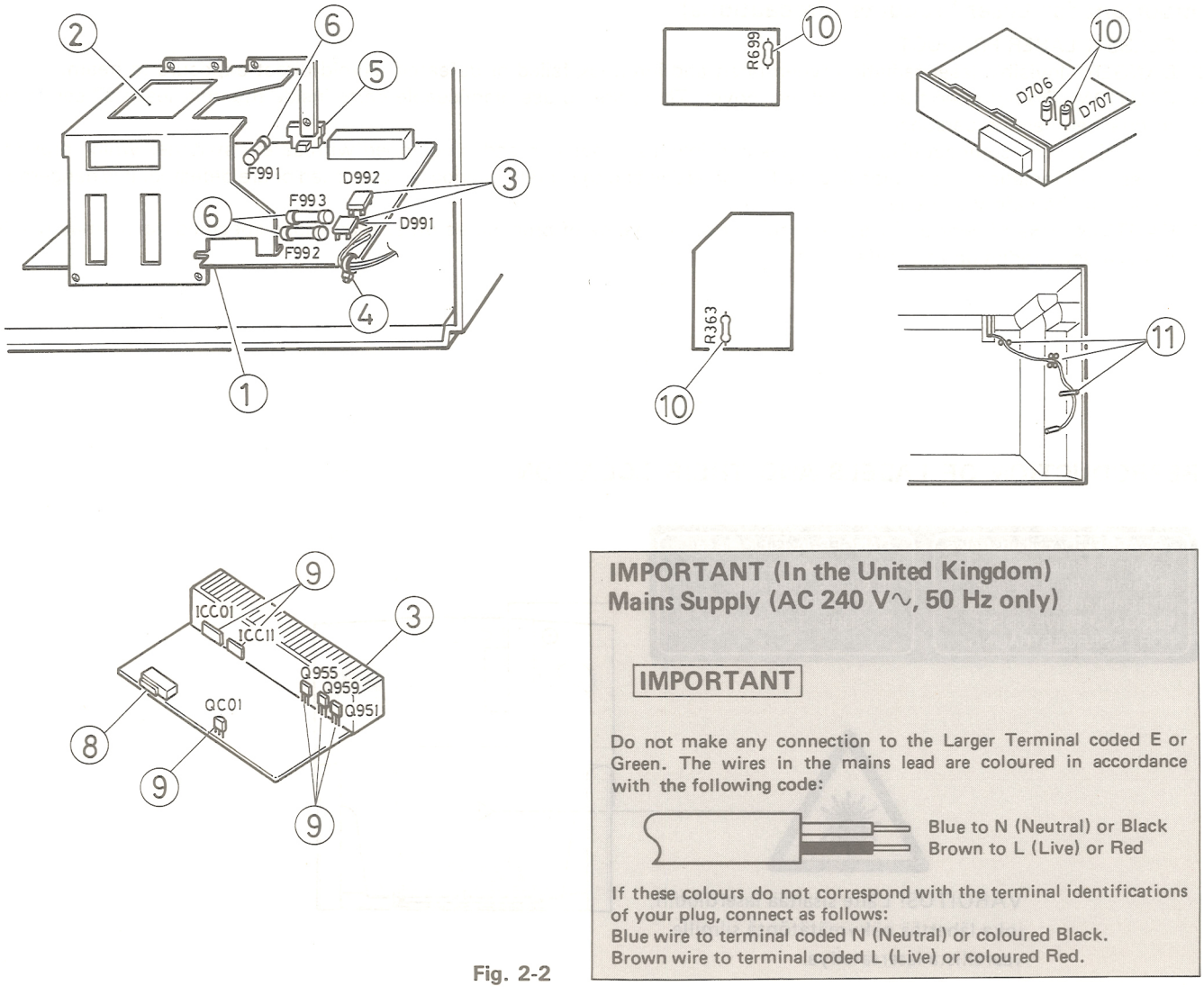

IMPORTANT (In the United Kingdom)
Mains Supply (AC 240 V~, 50 Hz only)

IMPORTANT

Do not make any connection to the Larger Terminal coded E or Green. The wires in the mains lead are coloured in accordance with the following code:

Blue to N (Neutral) or Black
Brown to L (Live) or Red

If these colours do not correspond with the terminal identifications of your plug, connect as follows:
Blue wire to terminal coded N (Neutral) or coloured Black.
Brown wire to terminal coded L (Live) or coloured Red.

Fig. 2-2

1. In order to maintain the space distance surround the primary terminal of the PCB, make sure there is no solder protruding from the soldering round.
2. Check that the power transistor is of type ''B, approval number VTP76C4-24ABS'', ''E, approval number VTP76C4-24A''.
   - When attaching the transformer to the bracket, make sure to use a screwdriver with manageable torque.
   - In order to prevent the pattern from coming off, make sure that the PCB does not float.
3. As the heat sink, transistors (Q951, Q959, Q955), ICs (ICC11, ICC01), and the diodes (D991, D992), etc., are parts that produce heat, make sure that they do not come in contact with the battery wire and the electric condenser.
4. In order to keep away from parts producing heat, make sure to use clamps.
5. Check that the AC socket is of type ''J-HSC 1463''.
6. make sure to check the indication of the fuse in the fuse cap before starting the work.
   The rated PCB indication and the mark of the fuse cap are as follows.

Symbol No.	PCB indication	Fuse mark	
		B	E
F991	T2A	'' ▽ '' & ''T2A''	''T2A''
F992	T6.3A	'' ▽ '' & ''T6.3A''	''T6.3A''
F993	T2.5A	'' ▽ '' & ''T2.5A''	''T2.5A''

8. Make sure that there is a FU TVS marking for fuse switch RY951.
9. Make sure that each of the electric condensers
   Heat sink IC (IC C01, IC C11), Transistor (Q959, Q951, QC 01)
   Resistor (R699, R363)
   Diode (D706,D707) LSI
10. Make sure that support parts are attached through bonding or that they are fastened with spacers.
11. Make sure that the antenna wire is fastened to the rib and that it has been attached through bonding.

3 Features

1. **Multi-function 6-Disc Automatic Changer with remote control.**
   - Direct access play (Disc/Track).
   - Flexible programmable playback (50 program memories).
   - Random play/Repeat/Intro scan functions.
2. **MW/LW/FM-stereo PLL synthesizer tuner.**
   - 20-station preset tuning (FM-10, MW-5, LW-5).
   - Seek/Manual tuning.
3. **Double-cassette mechanism (Deck A for recording and playback, Deck B for playback only).**
   - Auto-reverse mechanism for Deck B.
   - Dolby* B Noise Reduction system.
   - Metal and CrO_2 tape can be played back for superior sound quality.
   - Synchro-record start makes recording CDs convenient.
   - Synchro-start dubbing function (normal/high speed dubbing).
   - Relay playback (from Deck B to Deck A).
4. **Timer recording/playback and sleep functions.**
5. **"LIVE EFFEX" Sound System for the reproduction of an expanded sound field.**
6. **Hyper-Bass Sound System with 3D super woofer.**
7. **5-Band graphic equalizer (S.E.A.) controls.**
8. **PHONO/CD OUT jacks.**

*Dolby noise reduction manufactured under license from Dolby laboratories Licensing Corporation. "DOLBY" and the double-D symbol ⧈ are trademarks of Dolby Laboratories Licensing Corporation.

"LIVE EFFEX" Sound System

When stereo sources are heard from the speakers, often the sound feels far more restricted than in a live performance. This is because the stereo effect is degraded due to crosstalk** between our left and right ears. The PC-X1000 removes this acoustic crosstalk between the ears using our newly developed "LIVE EFFEX" signal sound processor; with this, the sound image extends beyond the speakers, realizing a natural stereo sound field.

** Crosstalk is a phenomenon in which sound from two channels is mixed; in addition to hearing sound from the right speaker, the right ear hears sound from the left speaker, with a slight time delay.

4 Specifications

CD changer section

Type	: Compact disc automatic changer
Signal detection	: Non-contact optical pickup (semiconductor laser)
Number of channels	: 2 channels (stereo)
Frequency range	: 16 Hz — 20,000 Hz ±1 dB
Dynamic range	: 85 dB
Signal-to-noise ratio	: 90 dB
Total harmonic distortion	: 0.03%
Wow & flutter	: Less than measurable limit

Radio section

Frequency ranges	: FM 87.5—108 MHz MW 522—1,629 kHz LW 144—288 kHz
Antennas	: Telescopic antenna for FM Ferrite core antenna for MW & LW

Tape deck section

Track system	: 4-track 2-channel stereo
Motor	: Electronic governor DC motor for capstan
Heads	: Deck **A;** hard permalloy head for recording/playback, permalloy head for erasure Deck **B;** head permalloy head for playback
Frequency response	: 40—14,000 Hz (with normal tape)
Wow and flutter	: 0.22% (WRMS)
Fast wind time	: Approx. 120 sec (deck **A**) (C-60 cassette), 170 sec (deck **B**) (C-60 cassette)

Speaker section (each unit)

Speaker	: 12 cm ×1 5 cm ×1
Impedance	: 4 Ω
Dimensions	: 191(W)×290(H)×216(D) mm
Weight	: Approx. 3 kg (6.7 lbs.)

General

3 D system	: ASW (Acoustic Super Woofer)
Power output	: 34 W (17 W + 17 W) at 4 Ω and 36 W for 3 D at 8 Ω (Max.) 22 W (11 W + 11 W) at 4 Ω and 28 W for 3 D at 8 Ω (10% THD)
S.E.A. characteristics	: S.E.A. center frequencies 63 Hz/ 250 Hz/1 kHz/4 kHz/16 kHz S.E.A. control range: ±8 dB
Input jacks	: PHONO×2 (3 mV/50 kΩ)
Output jacks	: CD OUT×2 (1.1 V/47 kΩ) speaker×2 (matching impedance 4 Ω—16 Ω) Headphones (30 mW/32 Ω) (matching impedance 16 Ω—1 kΩ)
Power supply	: AC 120/220/240 V, 50/60 Hz
Power consumption	: 115 W (with POWER SW ON) 7.5 W (with POWER SW STANDBY)
Dimensions	: 736(W)×308(H)×345(D) mm including knobs
Weight	: Approx. 16.3 kg
Accessories provided	: AC power cord Remote control unit (RM-RP1000) 6-Disc magazine×1 Battery "R03"×2 (for the remote control)

Design and specifications are subject to change without notice.

5 Instruction Book (Extract)

Names of Parts and Their Functions

- Top panel

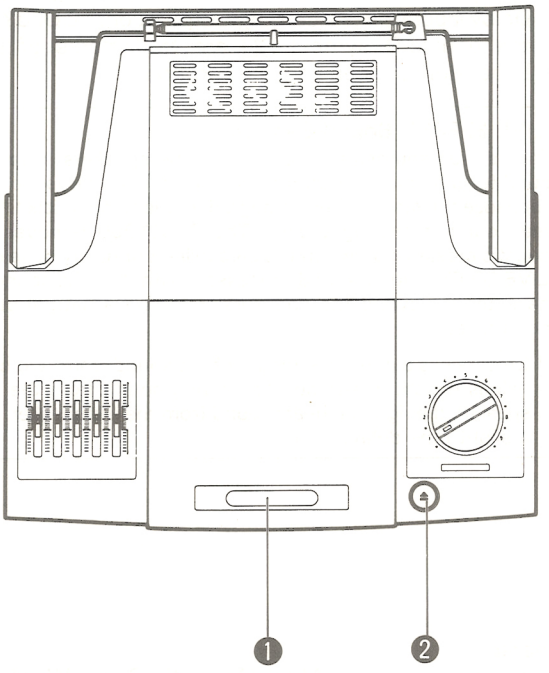

- Front panel

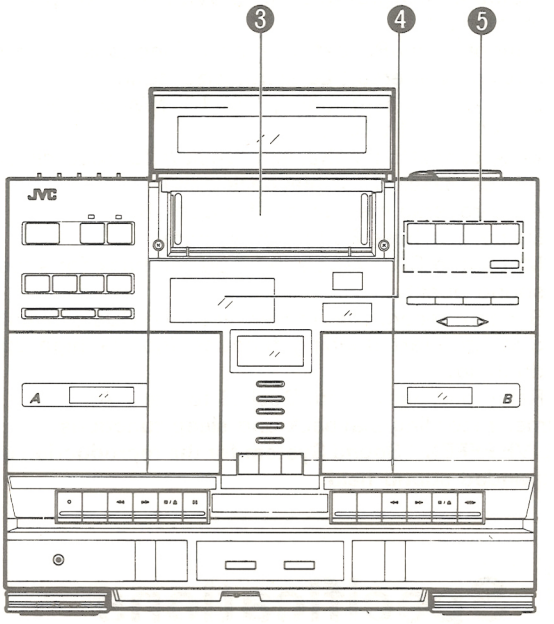

1. CD magazine door
2. CD magazine door open button (⏏)
   CD magazine eject button (⏏)
3. CD magazine loading slot

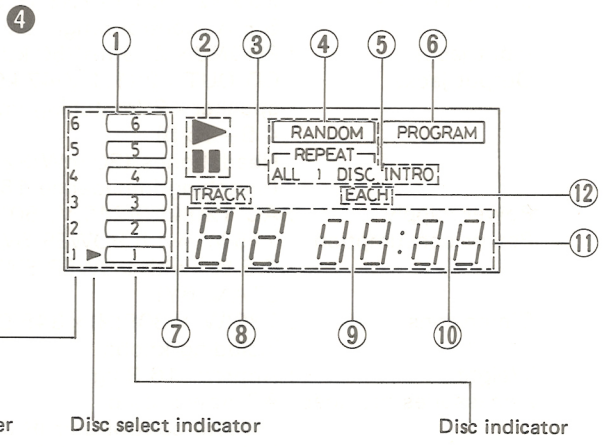

4. Display window (CD changer section)
   1. Disc status display
   2. Play/Pause indicators (▶ / ▮▮)
   3. REPEAT playback indicators (1/1 DISC/ALL DISC)
   4. RANDOM playback indicators (1 DISC/ALL DISC)
   5. INTRO scan indicators (ALL DISC/DISC)
   6. PROGRAM mode indicator
   7. TRACK indicator
   8. Track number display
   9. Time (minute)/Program order number display
   10. Time (second) display
   11. Indicators
       ALL
       no dISC
       000000
       EJECT
   12. EACH indicator

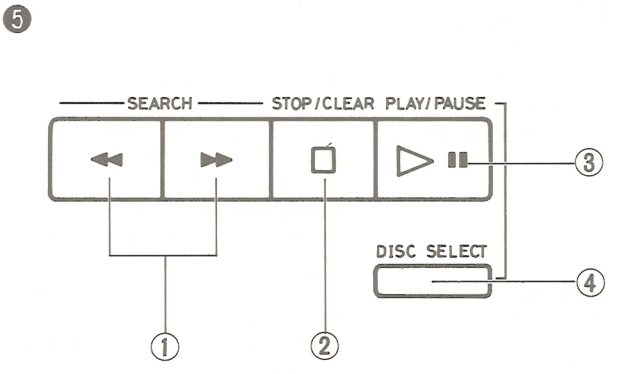

5. CD operation buttons
   1. SEARCH buttons (◀◀ , ▶▶)
   2. STOP/CLEAR button (□)
   3. PLAY/PAUSE button (▷▮▮)
   4. DISC SELECT button

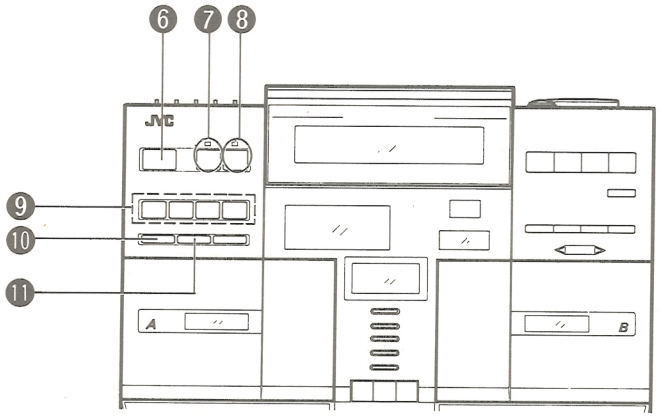

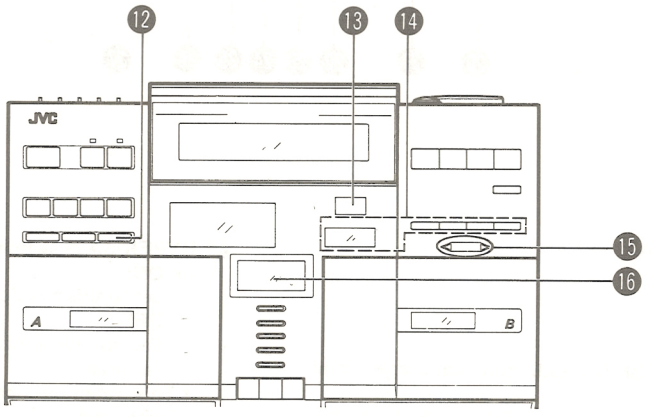

6 POWER switch (ON/STANDBY (SLEEP OFF))
7 SLEEP ON switch and indicator
8 TIMER switch and indicator
9 FUNCTION switches

TUNER:
Set to this position when listening to or recording from the radio.

TAPE:
Set to this position to listen to a tape or perform dubbing.

CD:
Set to this position when listening to or recording from the CD.

PHONO:
Set to this position when listening to or recording from a turntable connected to the PHONO jacks on the rear panel.

10 DUBBING switch

▬ HIGH SPEED:
Set to this position when dubbing at high speed.

▙ NORMAL SPEED:
Set to this position when dubbing at normal speed.

11 DOLBY NR switch
Set to ON (▬) when recording or playing back tapes using the noise reduction system.

12 TAPE (FOR PLAYBACK)/FM MODE switch

TAPE (FOR PLAYBACK)
Set this switch according to the type of tape to be used.

▬ METAL·CrO_2: (Playback only)
Set to this position to listen to a metal (type IV) or chrome (type II) tape.

▙ NORMAL:
Set to this position to listen to a normal (type I) tape.

FM MODE switch:

▬ MONO:
Set to this position when FM stereo reception is noisy.

▙ STEREO:
Set to this position when listening to or recording an FM stereo broadcast.

13 Remote sensor section
14 Clock/timer operation section
See pages 47 and 50.
15 Tape direction indicator (deck B)
► FORWARD direction.
◄ REVERSE direction.
16 Display window (Tuner section)
BAND indicator (FM1-FM2-FM3-AM)
Radio frequency display
PRESET STATION indicator
STEREO (FM stereo) indicator

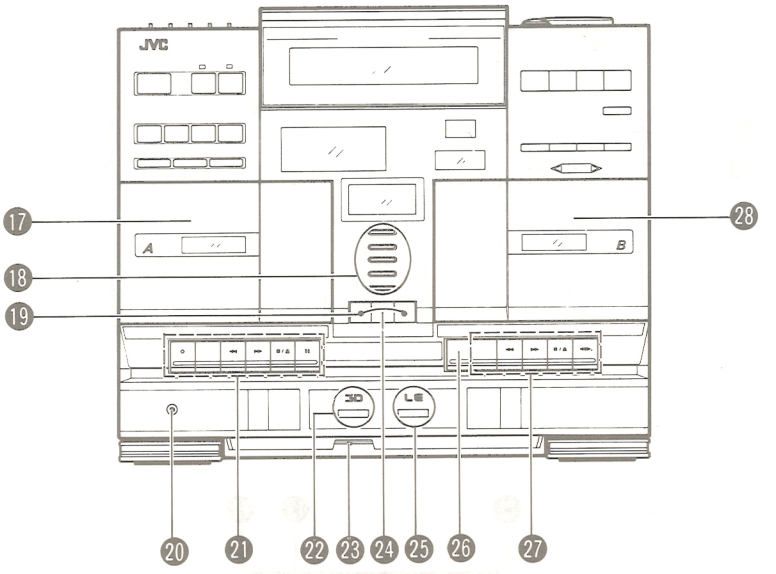

⑰ **Cassette holder (Deck A)**

⑱ **Preset station buttons**

⑲ **TUNING control**
- ∧ UP frequency
- ∨ DOWN frequency

⑳ **Headphones jack (PHONES) (3.5 mm dia. stereo mini jack)**
Connect headphones (impedance 16Ω – 1kΩ) to this jack. The speakers are automatically switched off when headphones are connected.

㉑ **Cassette operation buttons (Deck A)**
- ○ **REC:** Press this button for recording.
- ▶ **PLAY:** Press to play the tape.
- ◀◀ **REW:** Press to rewind the tape rapidly.
- ▶▶ **FF:** Press to wind the tape forward rapidly.
- ■/⏏ **STOP/EJECT:** Press to stop the tape. Pressing this button after the tape stops opens the cassette holder.
- ▮▮ **PAUSE:** Press to stop the tape temporarily. Press again to release the pause mode.

㉒ **HYPER-BASS switch and 3D indicator**
- **ON:** Set to this position to listen to Hyper-Bass Sound.
- **OFF:** Set to this position when Hyper-Bass Sound is not required.
- This function does not work while headphones are being used.

㉓ **BEAT CUT switch**
See page 44.

㉔ **BAND button**

㉕ **LIVE EFFEX switch and LE indicator**

㉖ **REVERSE MODE switch**
- : Continuous playback
- : Full playback

㉗ **Cassette operation buttons (Deck B)**
- **PLAY:** Press to play the tape.
- ◀◀ **(Fast wind) button:** Press to fast wind the tape from right to left.
- ▶▶ **(Fast wind) button:** Press to fast wind the tape from left to right.
- ■/⏏ **STOP/EJECT:** Press to stop the tape. Pressing this button after the tape stops opens the cassette holder.
- ◀▮▶ **DIRECTION button:** Press to change the direction of tape travel.

㉘ **Cassette holder (Deck B)**

● Top panel

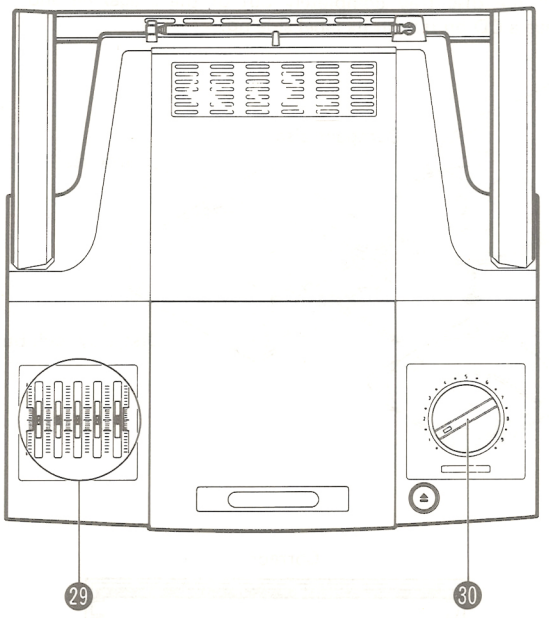

29 5-BAND GRAPHIC EQUALIZER controls (S.E.A.)
30 VOLUME control and indicator
31 Telescopic antenna for FM reception
32 Timer/clock battery compartment
33 VOLTAGE SELECTOR (120/220/240 V)
34 AC IN (AC input) terminal
35 SPEAKER terminals
Connect the provided speakers to these terminals.

● Rear panel

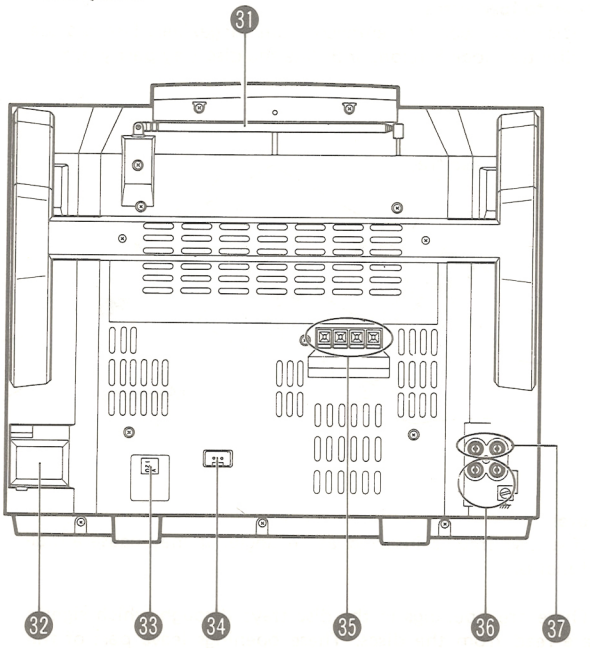

36 PHONO jacks and ground (GND) terminal
Connect a turntable with MM type cartridge.
37 CD OUT jacks
Connect to another stereo amplifier, etc. to listen to the CD sound from other equipment.

REMOTE CONTROL UNIT

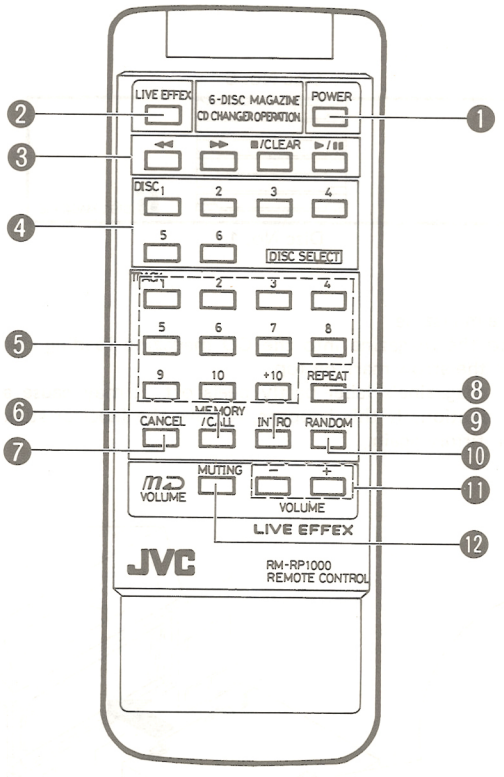

The following operations can be performed using the remote control unit.
● Read each function of the operation buttons carefully and operate correctly.

1 POWER button
2 LIVE EFFEX button
Use to expand the sound field with the LIVE EFFEX Sound System.
3 CD operation buttons
- Search buttons (◀◀ , ▶▶)
- Stop/clear button (■ /CLEAR)
- Play/pause button (▶ / ▮▮)

4 DISC SELECT buttons (No. 1 – No. 6)
- Use to select a disc from the CD magazine.

5 Track (tune) number buttons (No. 1 – No. 10, +10)
6 MEMORY/CALL button
7 CANCEL button
8 REPEAT button
9 INTRO scan button
10 RANDOM button
11 VOLUME buttons
– : Use to decrease the volume.
+ : Use to increase the volume.
When the volume is adjusted, the indicator in the VOLUME control of the center control section blinks and its VOLUME control moves clockwise or counterclockwise.
12 MUTING button
Press to mute the sound temporarily. The indicator in the VOLUME control blinks during muting. Press again to restore the original volume.

● **How to load discs**

1. Disc trays can be removed from magazines. Depress the disc tray lock button, and slide the disc tray partly out.

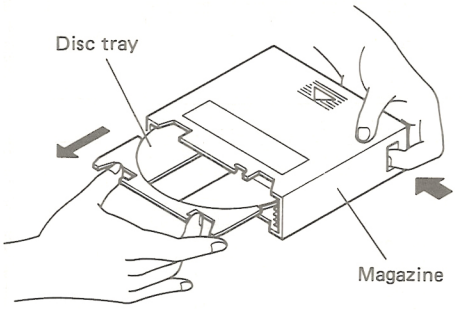

2. Pull the disc tray completely out of the magazine and place a CD on it with its label side up.

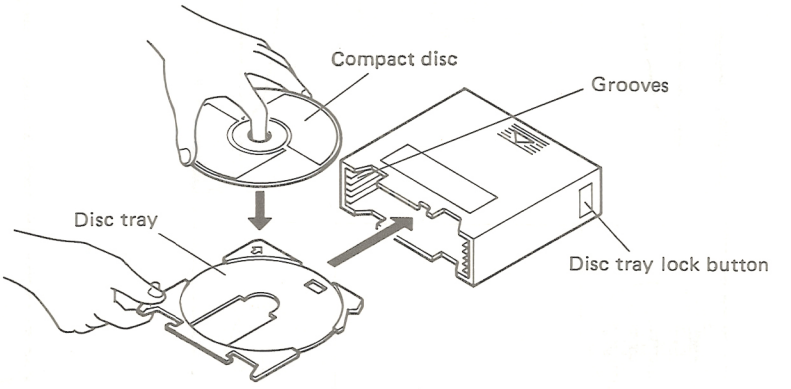

Notes:

- If a disc tray is inserted at an angle, it may cause a malfunction.
- There are openings in the disc trays through which signals are read from the discs. These openings leave part of the shiny side of the disc exposed. Be careful not to touch the shiny surface of the disc.
- It is not possible to play the compact discs if it is installed upside down.

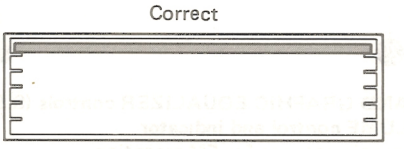

Do not insert at an angle.

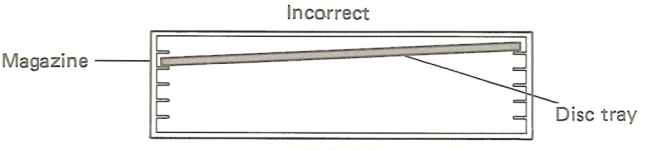

- The discs are in numerical order, with 1 at the bottom and 6 at the top. Load discs in magazines in the required order.

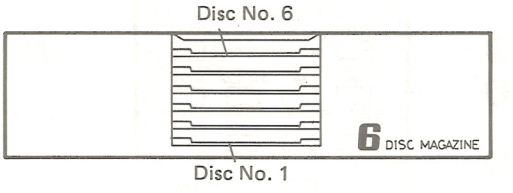

How to load a magazine.

1. Press the eject (⏏) button to open the disc magazine door.

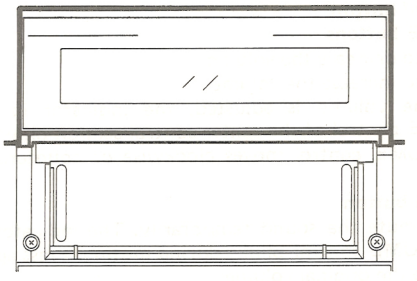

2. Load a magazine.
   - Load the magazine into the CD magazine loading slot with the arrow mark on top.
   - If a magazine's label partly peels off, it may cause a malfunction. If this happens, remove the label or stick it on firmly again.

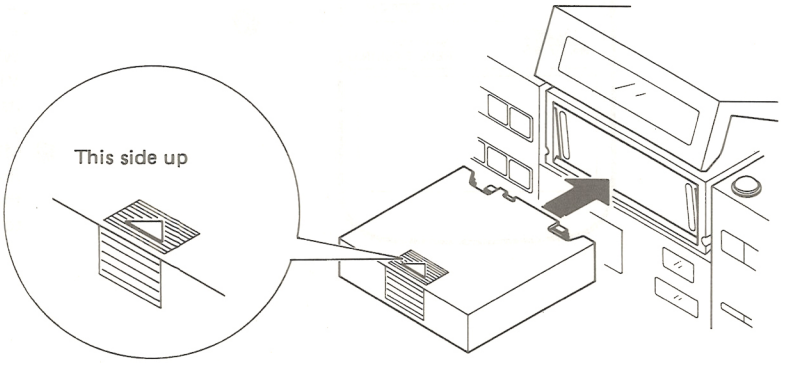

PLAYING COMPACT DISCS

To play all tunes on all discs in the CD magazine in sequence.

Operate in the order shown.

Displays the elapsed playback time of each tune being played back.

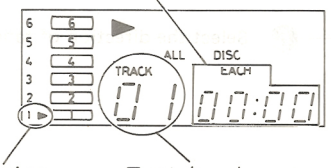

Disc number

Track (tune) number.

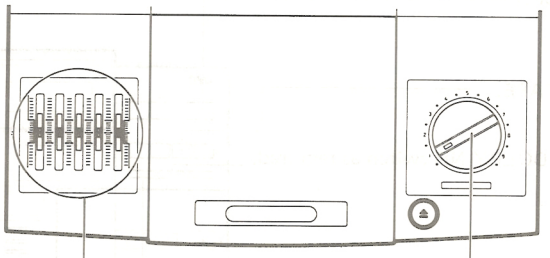

7 Adjust.

6 Adjust.

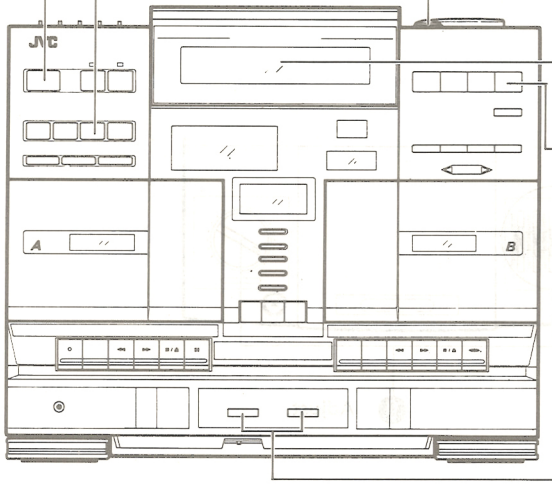

1 Set to ON.

2 Set to CD.

3 Press to open the CD magazine door.

4 Load a magazine. Close the CD magazine door.

5 Press to start playback. The disc number, track (tune) number and playback time are displayed.

8 Set the HYPER-BASS and LIVE EFFEX switches as required.

- After the last tune of the first disc has been played, playback automatically continues with the beginning of the disc on the next tray. If there is no disc on the next tray, the display shows "no dISC"; when the end of the last disc is played back, the CD playback stops.

- When "no dISC" is displayed, the disc indicator goes out, so that a tune from this disc cannot be selected or played back.

The indicator goes out.

CASSETTE PLAYBACK
(The example shows deck B.)

Operate in the order shown.

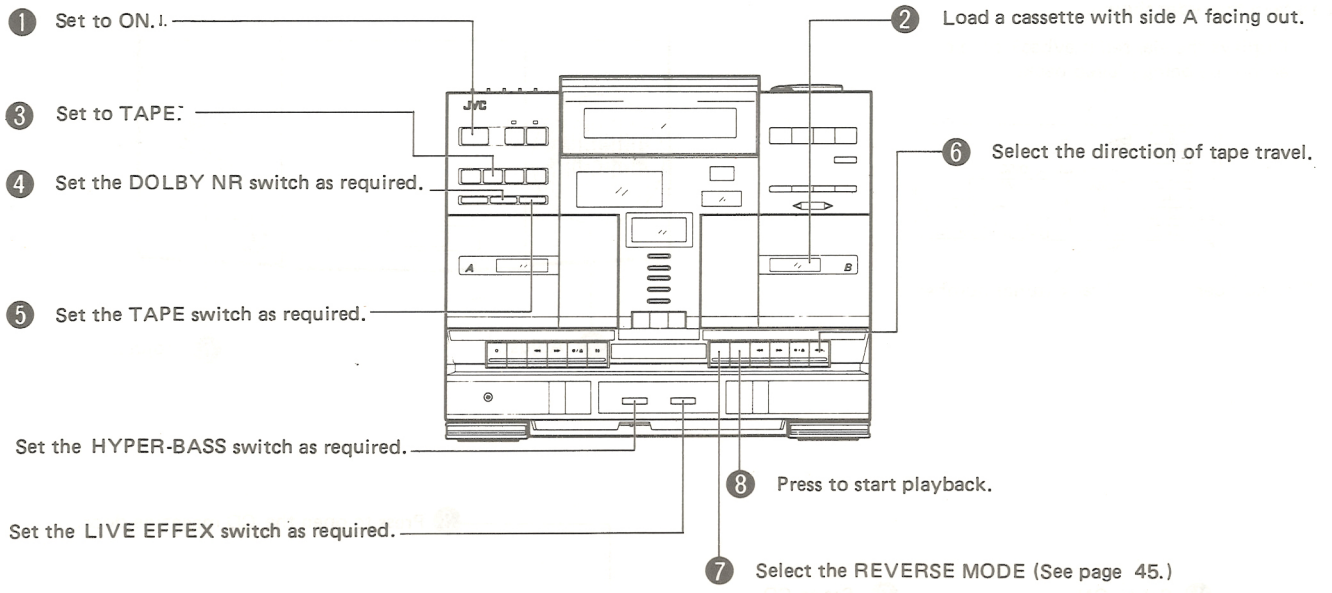

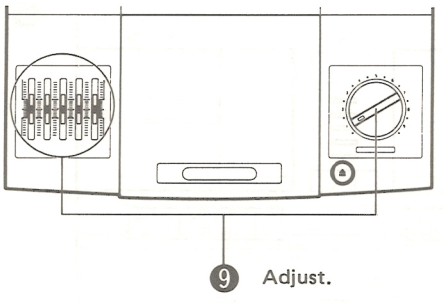

- **Playback in deck A**
  The previous procedures 4, 5 and 8 also apply to deck A when a cassette is loaded in deck A. (Deck A does not have an auto reverse function, so only one side will be played back.) When decks A and B are simultaneously set to the play mode, only the playback sound of deck B will be heard.

RELAY PLAYBACK
(From deck B to deck A)

Operate in the order shown.

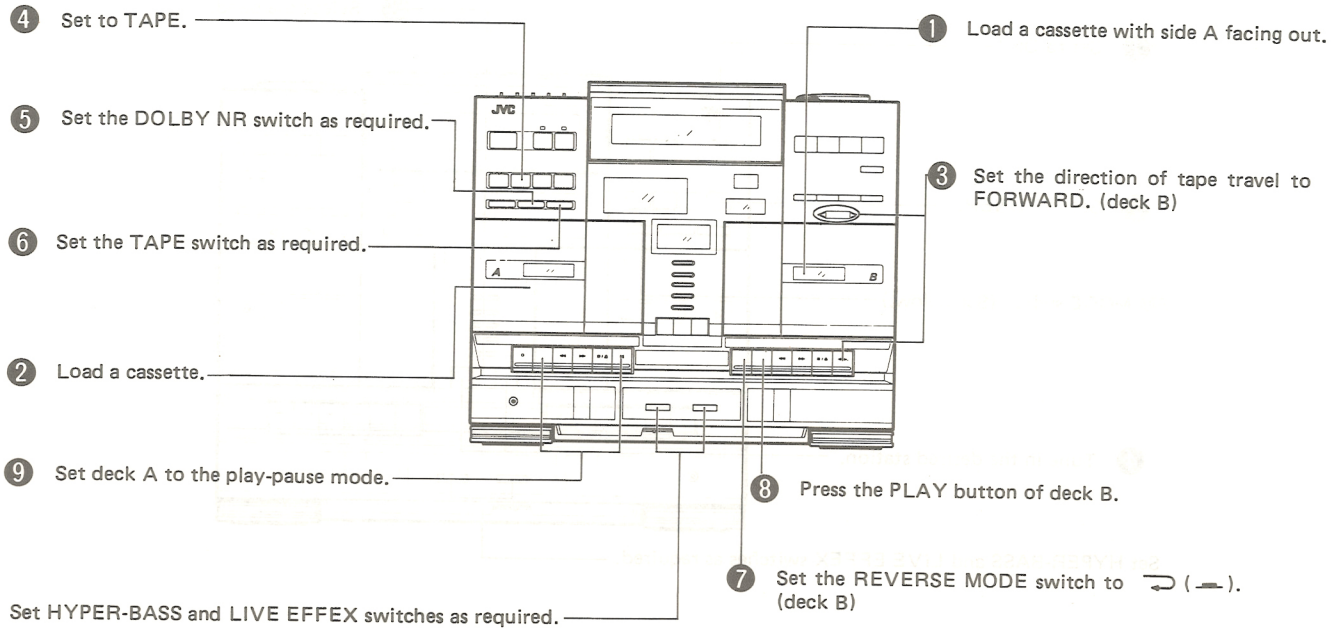

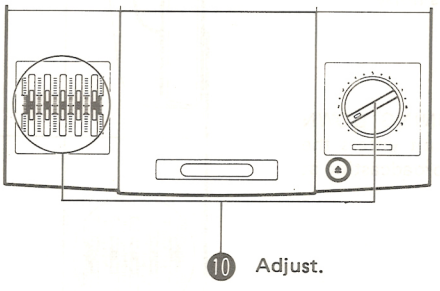

- When deck B stops, deck A's pause mode will be released and it will start playback. When deck A stops, relay playback will be released.

Notes:
1. Use the same type of tape in decks A and B.
2. If the REVERSE MODE of deck B is set to ⮌ (▬), relay playback cannot be performed. (Continuous playback is performed in deck B.)

RADIO RECEPTION

Operate in the order shown.

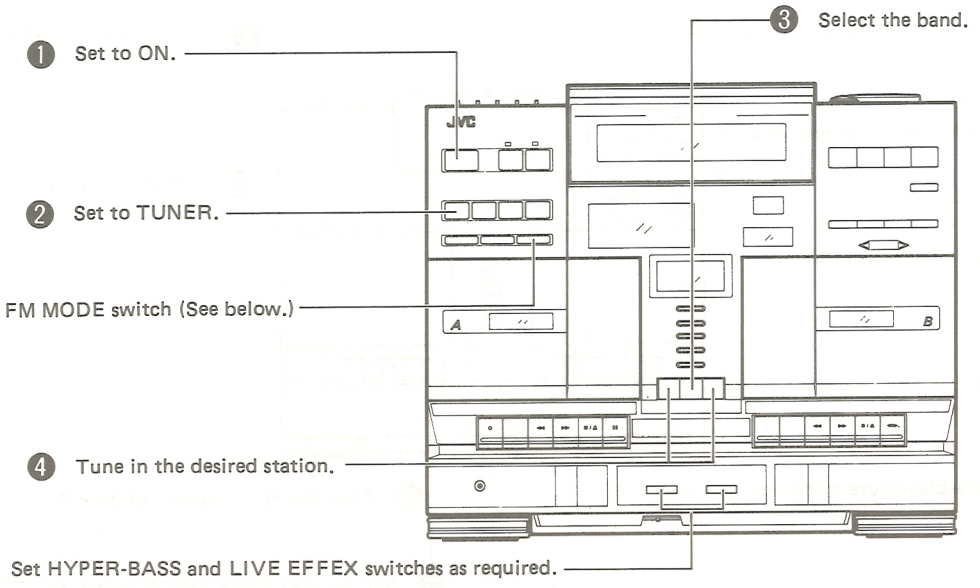

FM MODE switch

STEREO ( ):
Set to this position when listening to or recording an FM stereo broadcast.
MONO ( ):
Set to this position when FM stereo reception is noisy.

Seek tuning

By pressing the TUNING UP (∧) or TUNING DOWN (∨) button for more than 1 second, the unit enters the search mode and tunes to the adjacent station broadcasting at a higher or lower frequency.

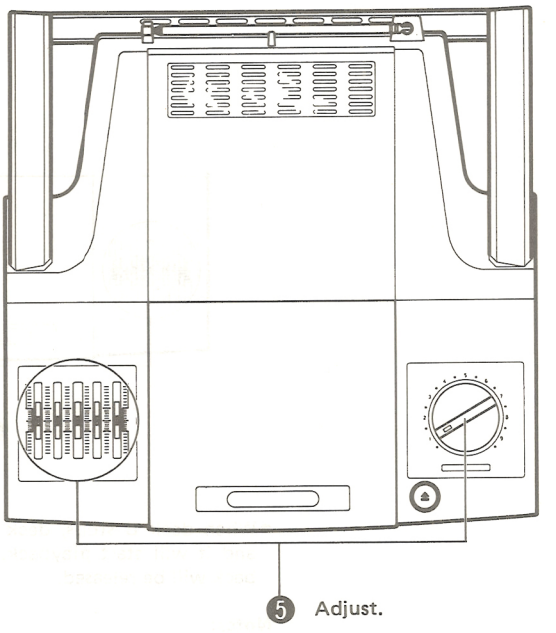

Manual Tuning

By pressing the Tuning button, you can move up and down the frequency band. You can step through the frequency in 50 kHz units for FM, 9 kHz units for MW and 11 kHz units for LW.

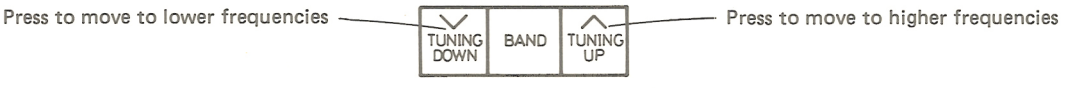

Presetting stations

Five stations in each band (FM1, FM2, FM3 and MW and LW) can be preset as follows:

- **Example (when presetting Preset button "3" to FM station at 103.5 MHz)**

① Select the FM1 band using the BAND button.
② Tune to the desired station.
③ Press Preset button "3" for more than 2 sec. (When "3" flashes in the Preset Station display, the station is preset.)

- Repeat the above procedure for each of the other four stations using a different Preset button each time.
- Follow the above procedure for the other bands (FM2, MW and LW).

Note:
When the unit is used more than 30 minutes after being preset, the preset station memory will be held for approx. 48 hours after unplugging the power cord. Presetting is required again when the preset stations are cancelled.

①

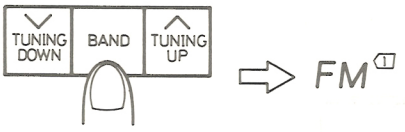

②

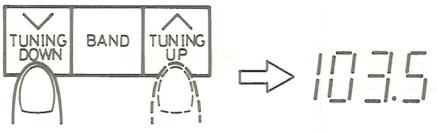

③

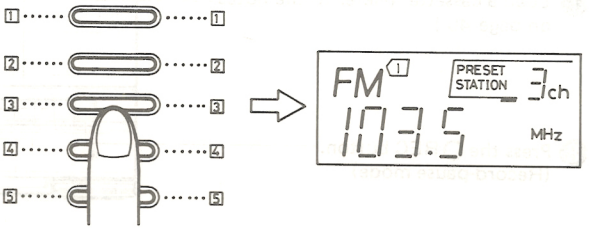

Using the antennas

FM

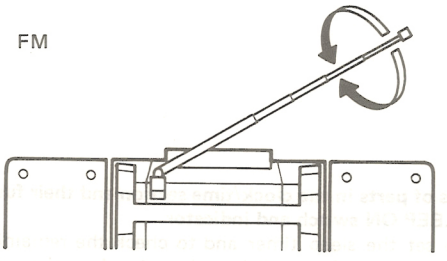

MW & LW

Note:
The built-in ferrite core antenna can pick up interference tones from television receivers in the neighborhood and thereby disturb MW and LW reception.

DUBBING (SYNCHRO-START DUBBING)

Normal and high-speed dubbing can be done from deck B to deck A.

Operate in the order shown.

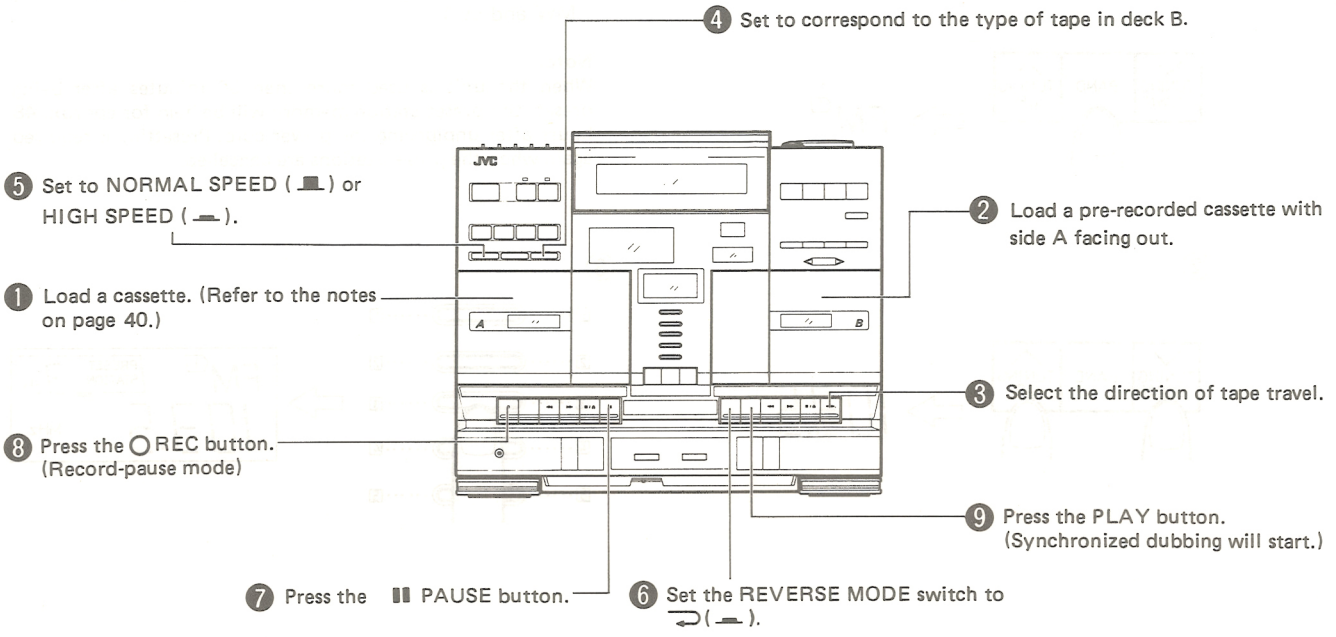

Note:
Television receivers placed close to this unit may cause interference on the recorded signal when this unit is used in the high-speed dubbing mode. If this happens, either turn off the television receiver or use the normal-speed dubbing mode.

CLOCK ADJUSTMENT

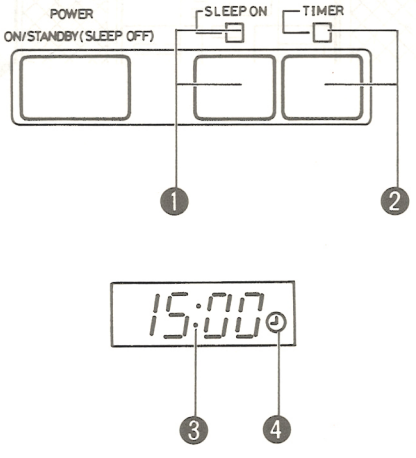

Names of parts in the clock/time section and their functions

1. **SLEEP ON switch and indicator**
   To set the sleep timer and to check the remaining sleep time. The indicator lights when the sleep timer has been set.
2. **TIMER switch and indicator**
   To set the timer ON/OFF. The indicator lights when it is set to ON.
3. **Display window**
4. **Timer mode indicator**
5. **CLOCK SET button**
   To set the time.
6. **TIMER SET button**
   To set the timer start time.
7. **HOUR button**
   To set the hours.
8. **MINUTE button**
   To set the minutes. This button is also used to count down the sleep time.

RECORDING (Deck A)

- **In recording, the ALC circuit automatically optimizes the recording level and adjustment of the recording level is unnecessary.**

Operate in the order shown.

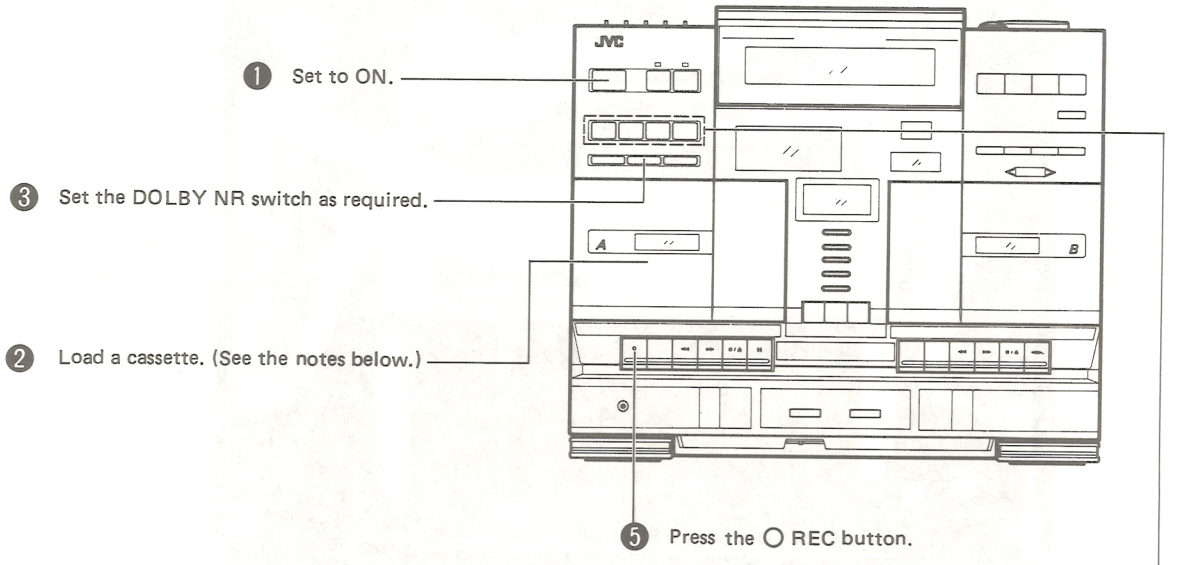

Notes:

1. The recording characteristics of this unit are those of normal tape. Normal tape has different characteristics from CrO_2 and metal tapes.
2. Do not operate any button on deck B during recording.
3. If a turntable is agitated while it's being used for recording, the ALC circuit of the PC-X1000 may malfunction. Therefore, wait about 1 minute to start the recording again.

6 Location of Main Parts

■ The inside of front cabinet

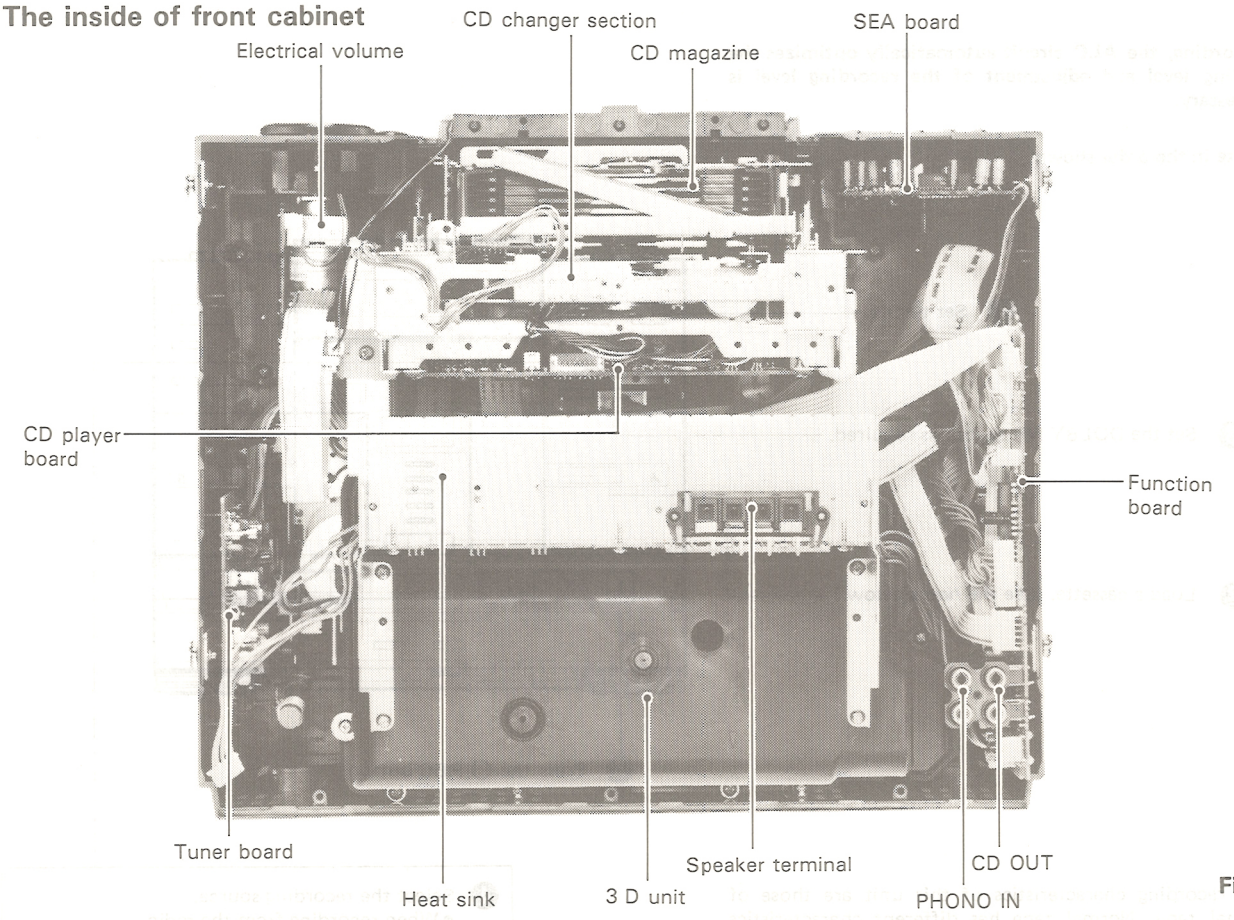

Fig. 6-1

■ The inside of rear cabinet

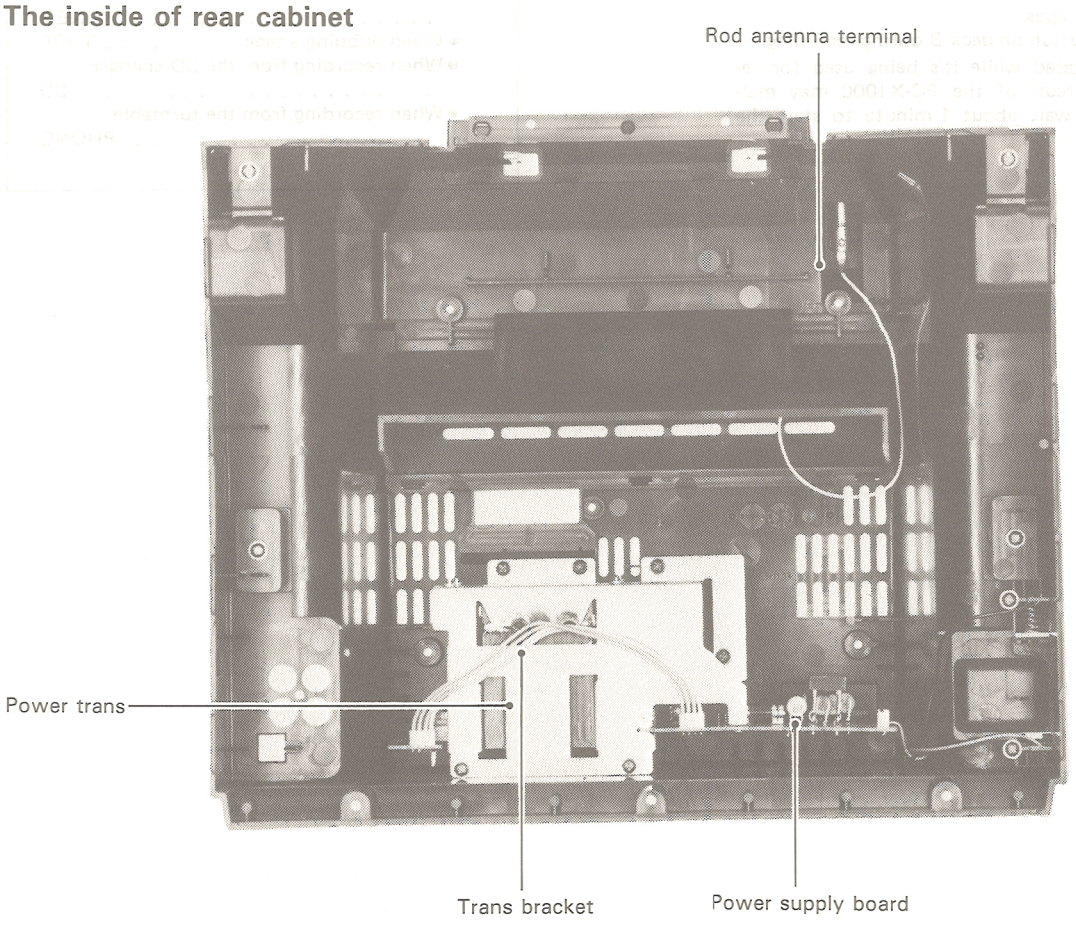

Fig. 6-2

■ The inside of front cabinet : to remove the 3 D unit

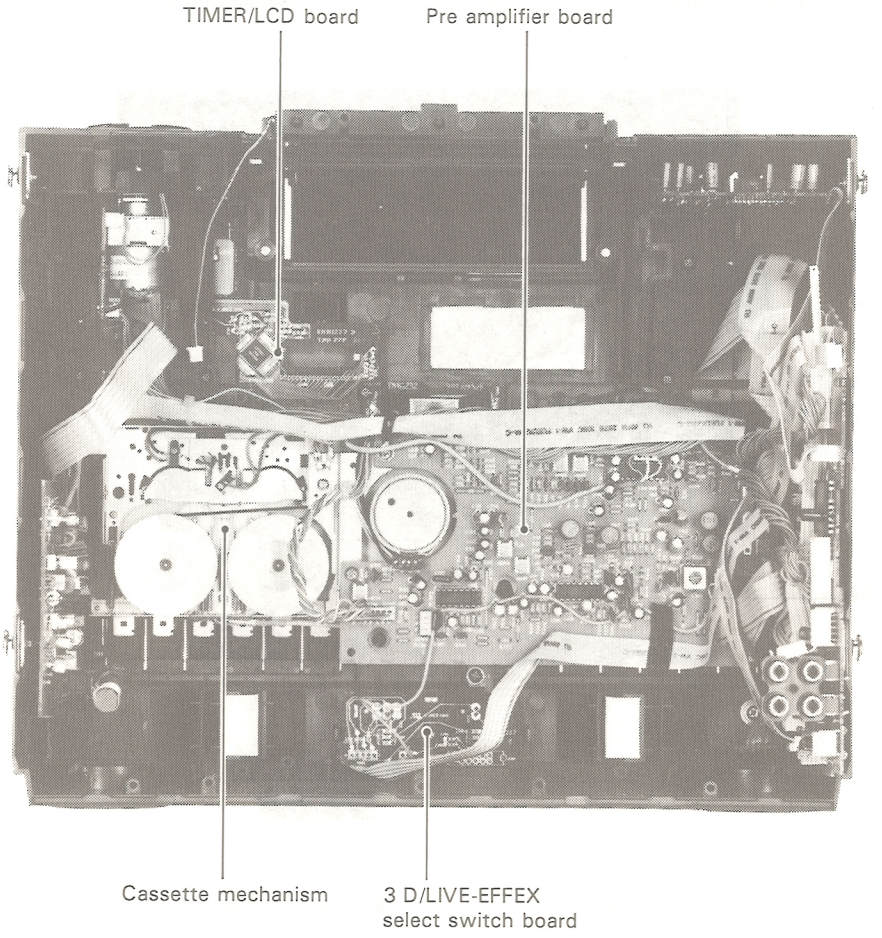

Fig. 6-3

■ Pick up Unit Section

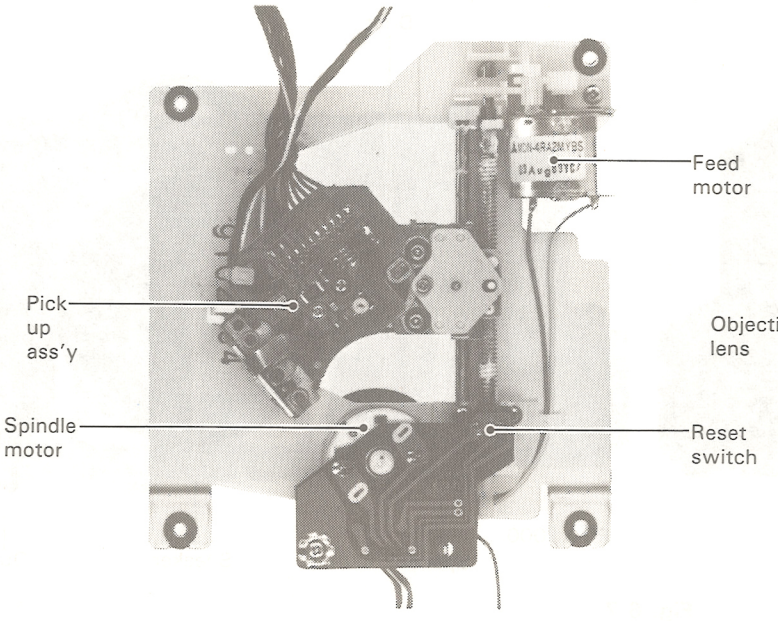

Fig. 6-4

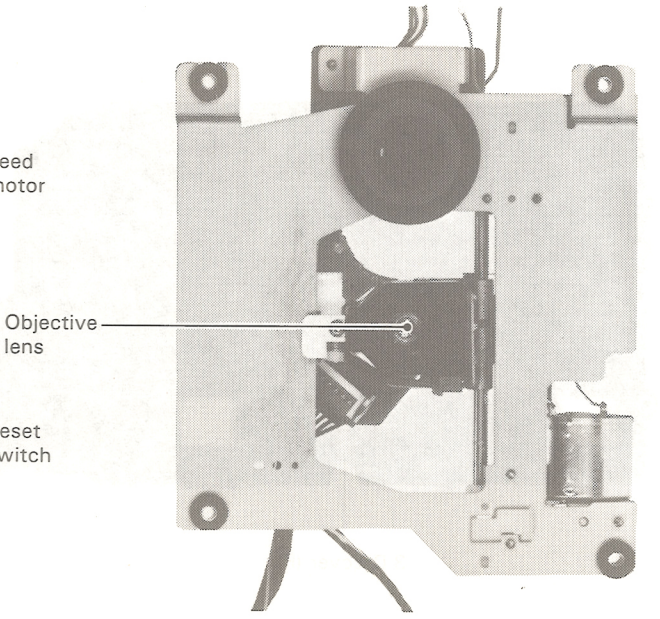

Fig. 6-5

■ 3 D Unit

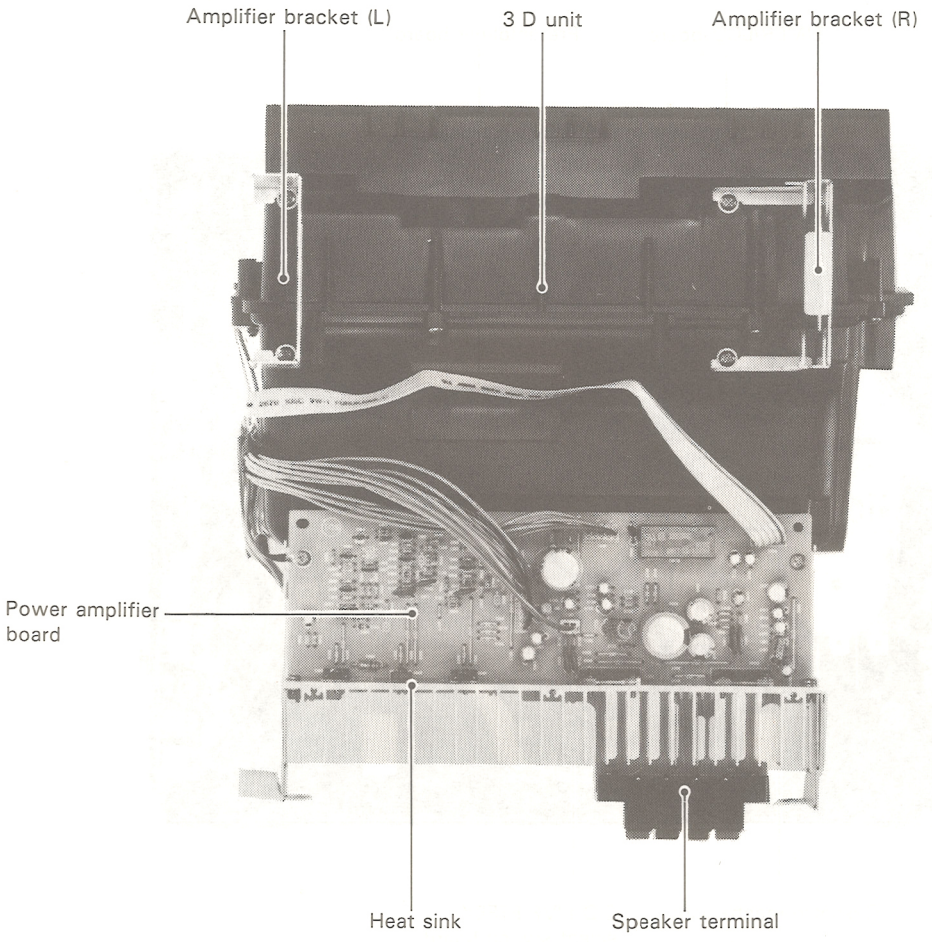

Fig. 6-6

■ The inside of 3 D unit

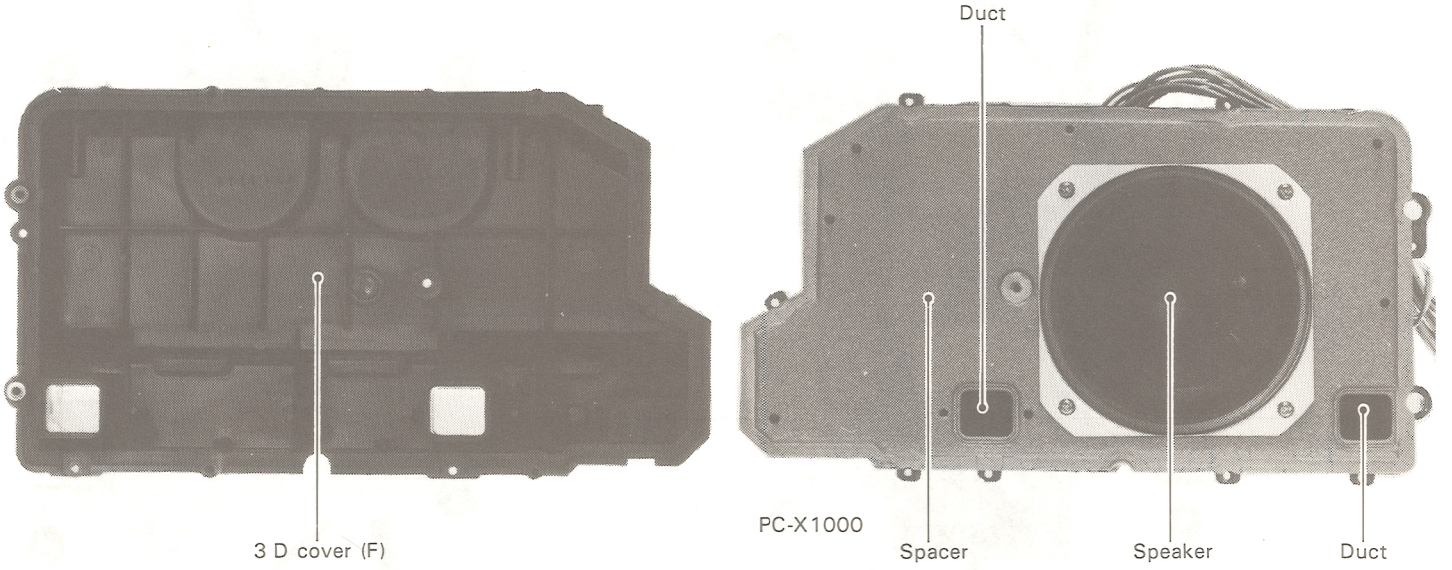

Fig. 6-7

■ CD changer mechanism : Top view

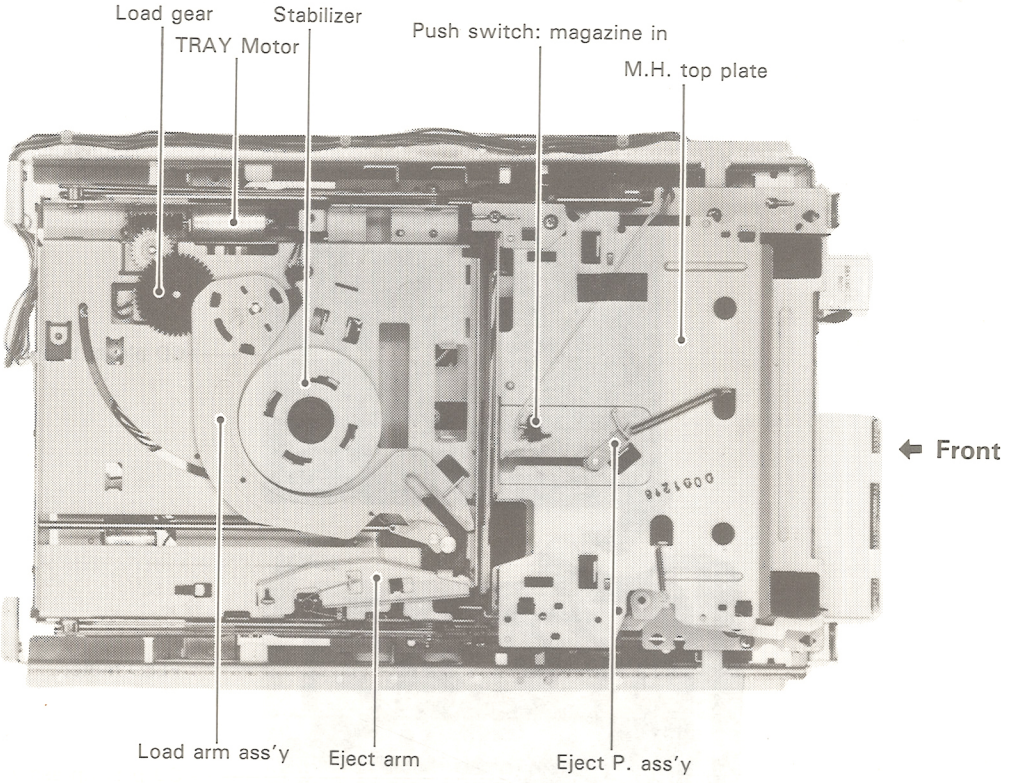

Fig. 6-8

■ CD changer mechanism : Bottom view (1)

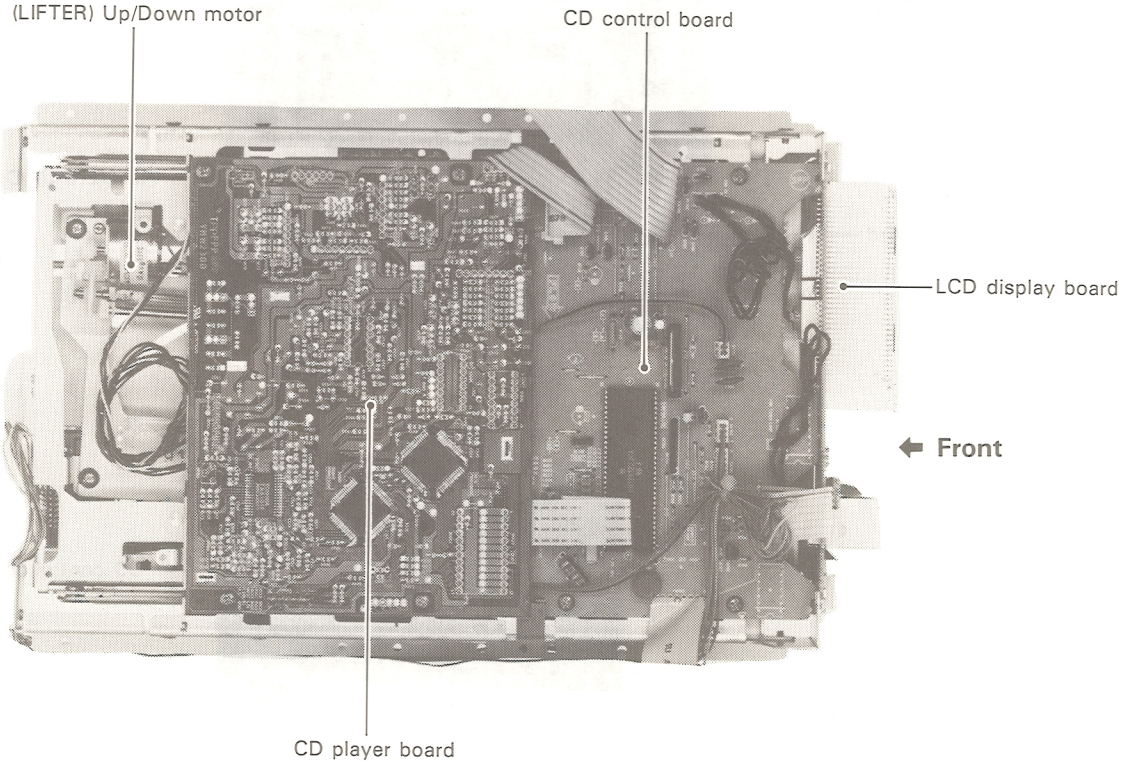

Fig. 6-9

■ CD changer mechanism : Bottom view (2)

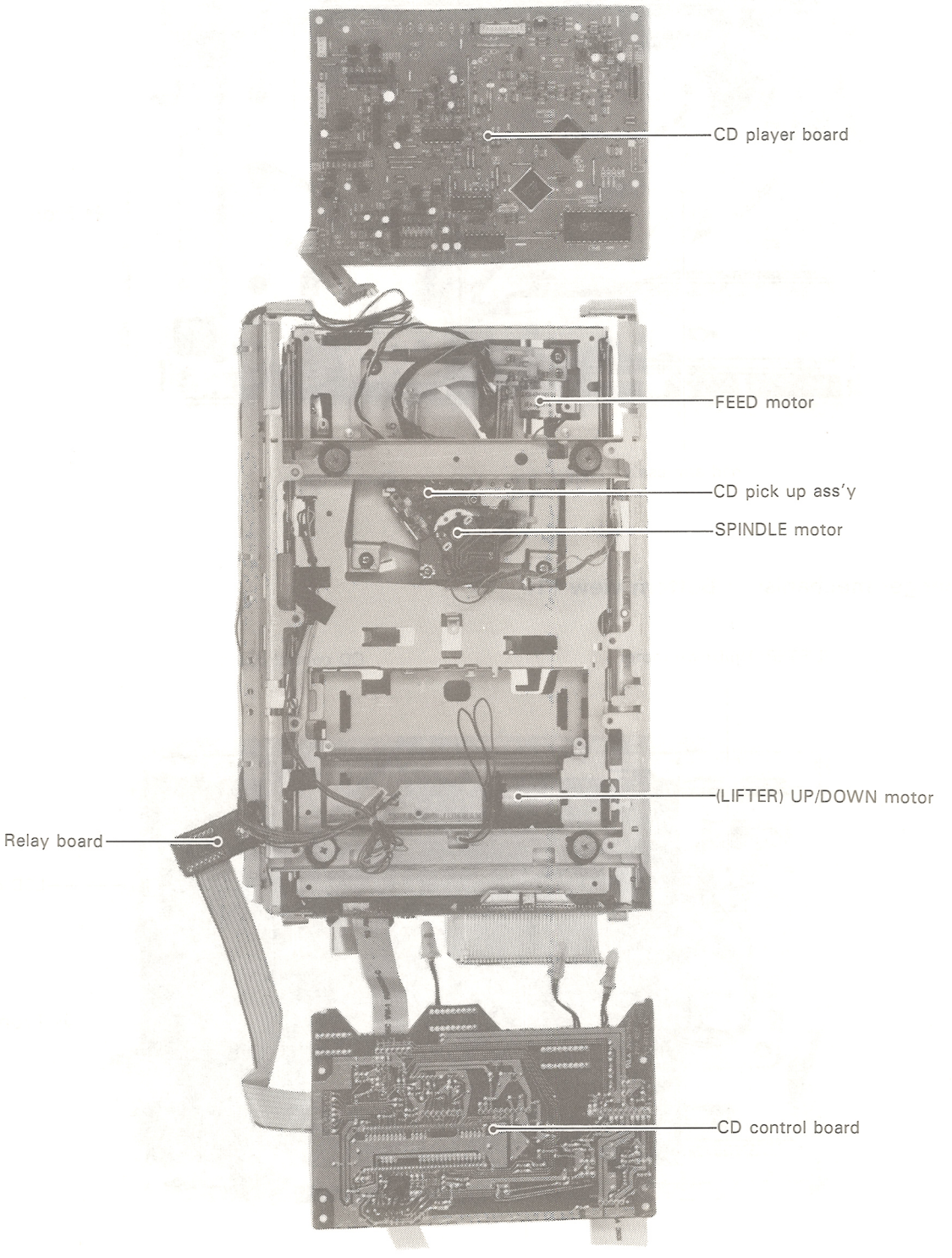

Fig. 6-10

■ Cassette Mechanism: front view

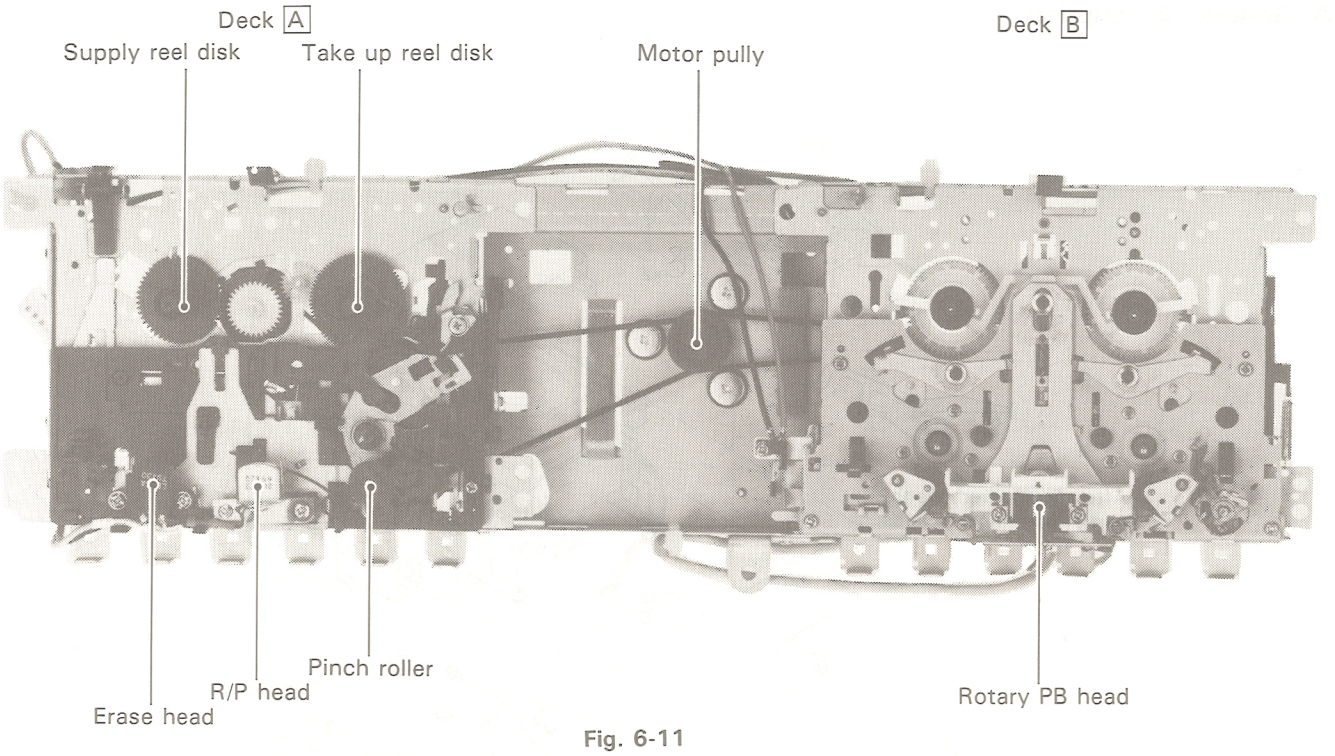

Fig. 6-11

■ Cassette Mechanism: rear view

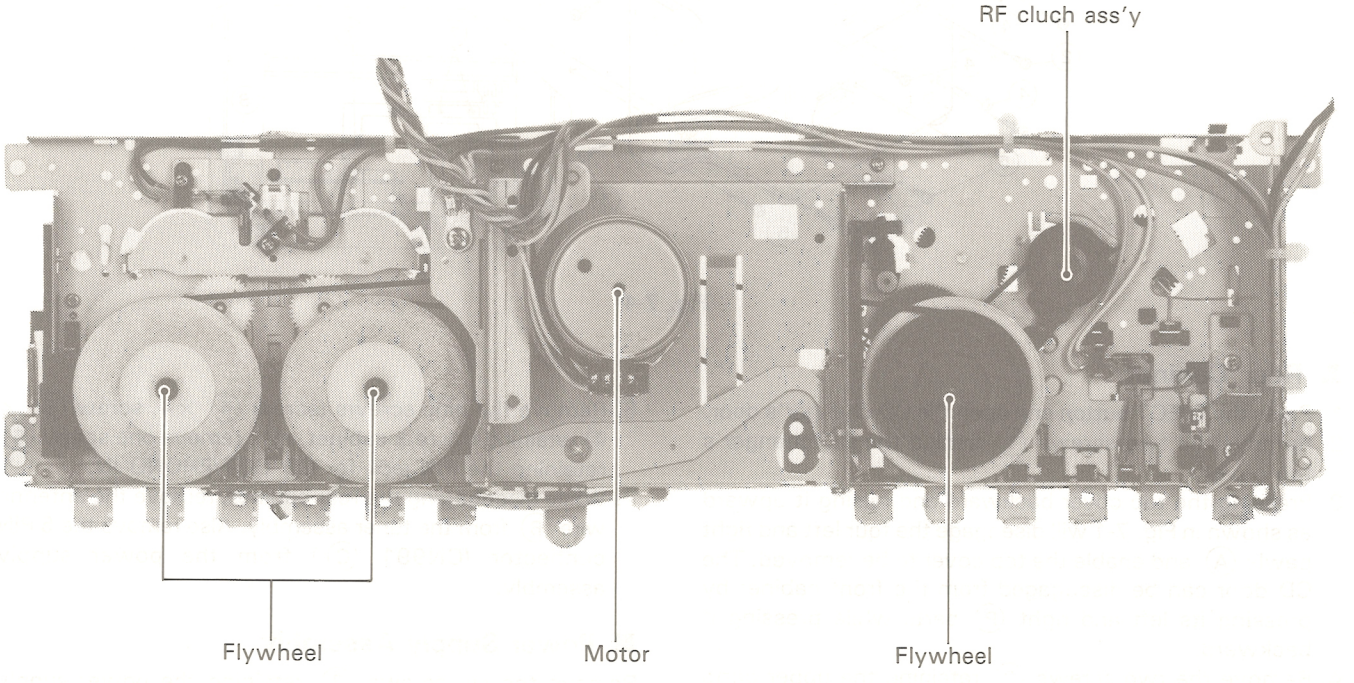

Fig. 6-12

7 Removal of Main Parts

■ General Description

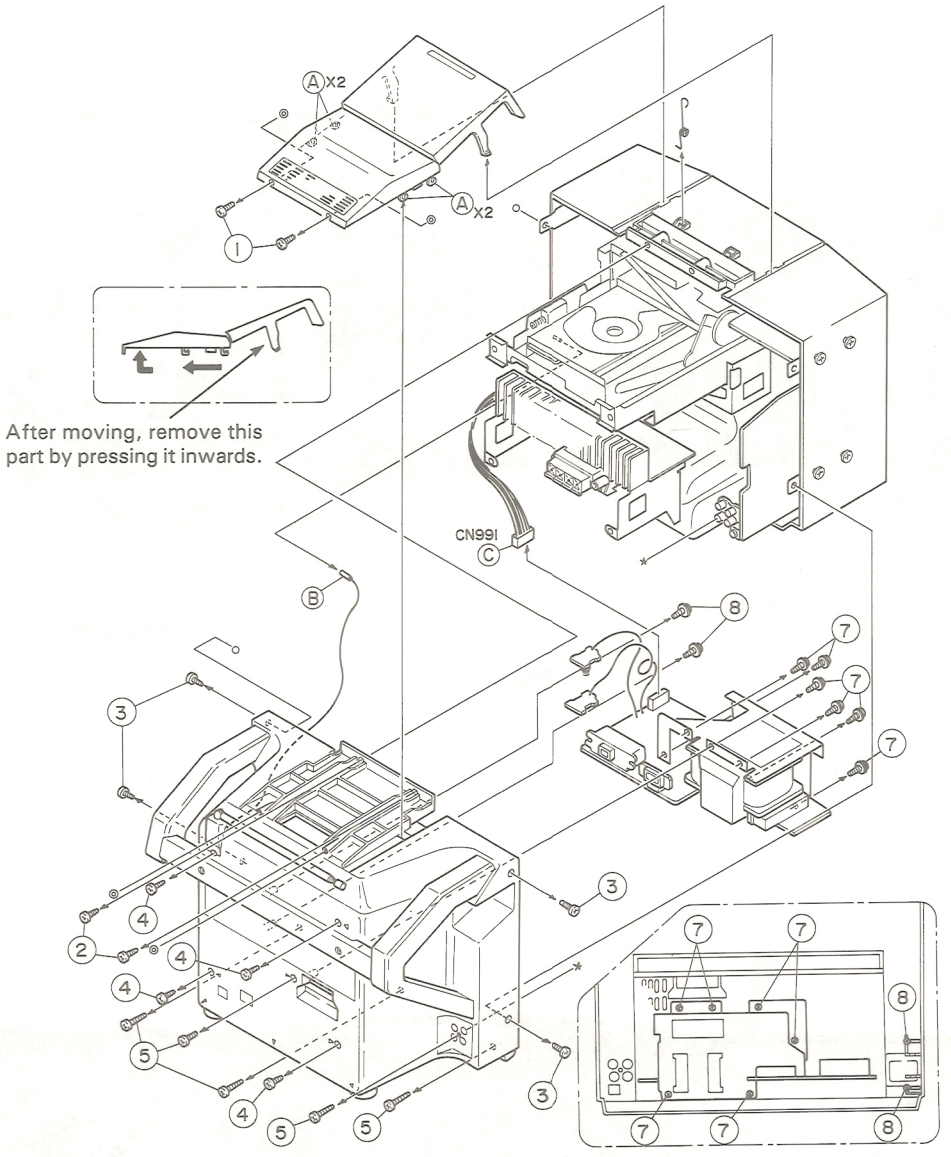

Fig. 7-1

■ Rear Cabinet

1. Press the EJECT button and open the CD changer's door.
2. Remove the two screws ① behind the CD changer's top cover.
3. Pressing the top cover backward and raising it upward as shown in Fig. 7-1 will disengage the four left and right pawls Ⓐ and enable the top cover to be removed. The CD door can be disengaged from the front cabinet by pressing its left and right Ⓟ parts while pressing it backward.
4. Remove the two screws ② retaining the upper parts of the front and rear cabinets.
5. Remove the four screws ③ retaining both sides of the rear cabinet. (The places indicated with triangular symbols.)
6. Remove the nine screws (screw ④ ×4, screw ⑤ × 4) retaining the rear cabinet, also remove one screw ⑤ retaining the PIN jack for CD OUT/PHONO IN.
7. While disengaging the rear cabinet, remove the antenna wire Ⓑ from the tuner assembly. Also remove the 5 PIN connector (CN991 Ⓒ) from the power supply assembly.

■ Power Supply Assembly

Remove the six screws ⑦ retaining the power supply assembly.

■ Battery Contact Assembly for Timer

Remove the two screws ⑧ retaining timer's battery contact assembly.

Note on pulling out the VR knob:
(The LED circuit board may be damaged).
Pull it out at the gradation of 2 ~ 8.

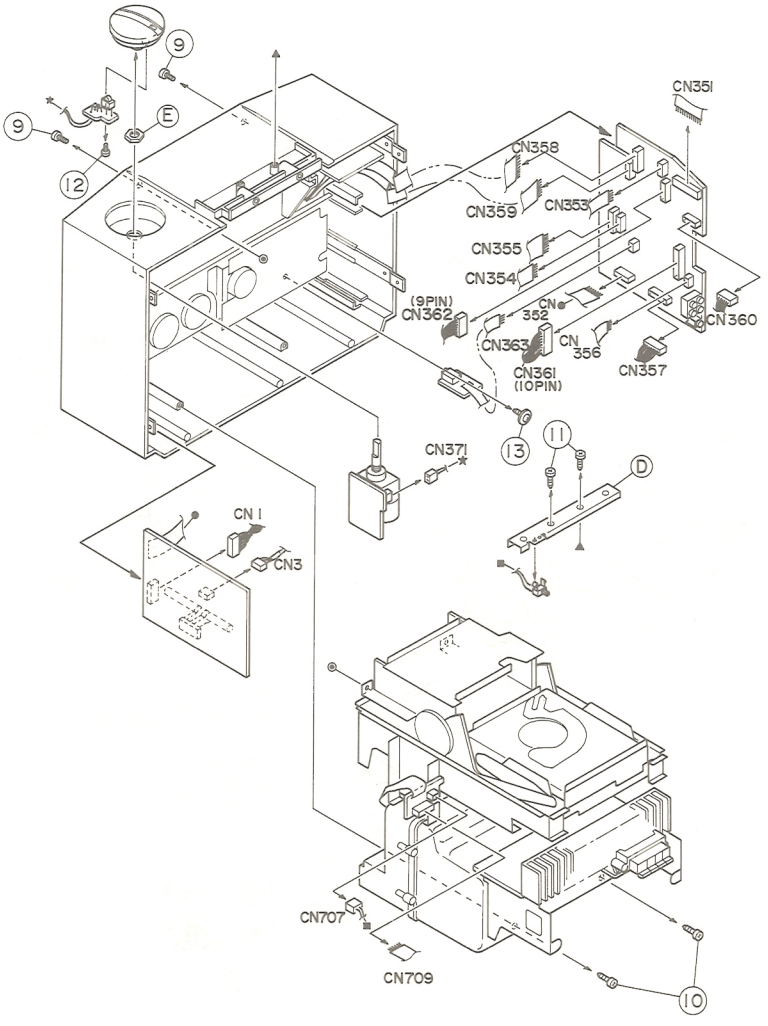

Fig. 7-2

■ CD Changer Assembly and 3D Unit

1. Remove the two screws (9) retaining the CD changer assembly from the front cabinet's face.
2. Remove the two screws (10) retaining the 3D unit, then remove the CD changer and 3D unit assembly at the same time.
3. Remove the 2 PIN plug and 7 PIN parallel wires from the repeater assembly (CN707 and CN709) retaining the CD changer's left side.
4. Remove the two screws (11) retaining the swtich bracket (D).

■ Function Assembly

1. Remove the parallel wires from the ten connectors provided on the function assembly, as follows:
   (1) From Connector CN351 Remove the CD changer control board 11 PIN parallel wires
   (2) From Connector CN356 Remove the power amplifier board 5 PIN parallel wires
   (3) From Connector CN357 Remove the power amplifier board 10 PIN plug
   (4) From Connector CN358 Remove the Function Switch board 9 PIN parallel wires
   (5) From Connector CN359 Remove the Function Switch board 7 PIN parallel wires
   (6) From Connector CN363 Remove the Headphone Jack board 4 PIN parallel wires
   (7) From Connector CN353 Remove the 3D/Live-EFFEX Switch board 6 PIN parallel wires
   (8) From Connector CN354 Remove the pre amplifier board 6 PIN parallel wires
   (9) From Connector CN355 Remove the pre amplifier board 8 PIN parallel wires
   (10) From Connector CN352 Remove the Tuner board 7 PIN parallel wires

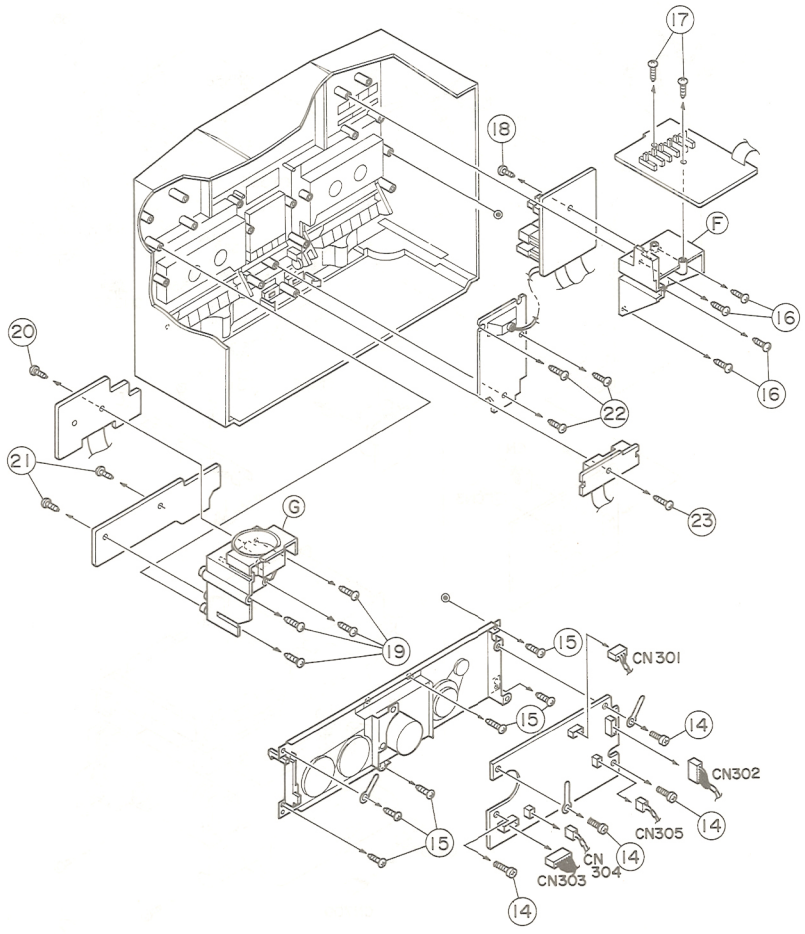

Fig. 7-3

2. Disengage the plugs from the three connectors provided on the function assembly, as follows:

(1) From Connector CN360 Remove the SEA board 6 PIN parallel wires
(2) From Connector CN361 Remove the Electrical volume board 10 PIN plug
(3) From Connector CN362 Remove the Timer/LCD board 9 PIN plug

■ Electrically-Driven Volume

1. Detach the volume knob. However, detach with the volume set to the scale of MIN ~ 3 or 7 ~ MAX to prevent the LED assembly's damage.
2. Remove the screw (12) retaining the LED assembly onto the volume knob's rear.
3. Detach the 2 PIN plug extending from the volume's LED assembly from the volume assembly's connector CN371.
4. Remove the nut (E) fitting the volume.

■ Tuner Assembly

1. From connector CN1 of the tuner assembly, remove the 11 PIN plug extending from the DTS assembly.
2. From connector CN3 of the tuner assembly, remove the 3 PIN plug extending from the DTS assembly.

■ Headphone Assembly

1. Remove the screw (13) retaining the headphone assembly.

■ Preamplifier Assembly

1. Detach the four connectors provided on the preamplifier assembly:

(1) Connector CN301 Detach the direction assembly's 3 PIN plug provided on mechansim B.
(2) Connector CN302 Detach the 7 PIN plug extending from the recording and playing back/erasing head.

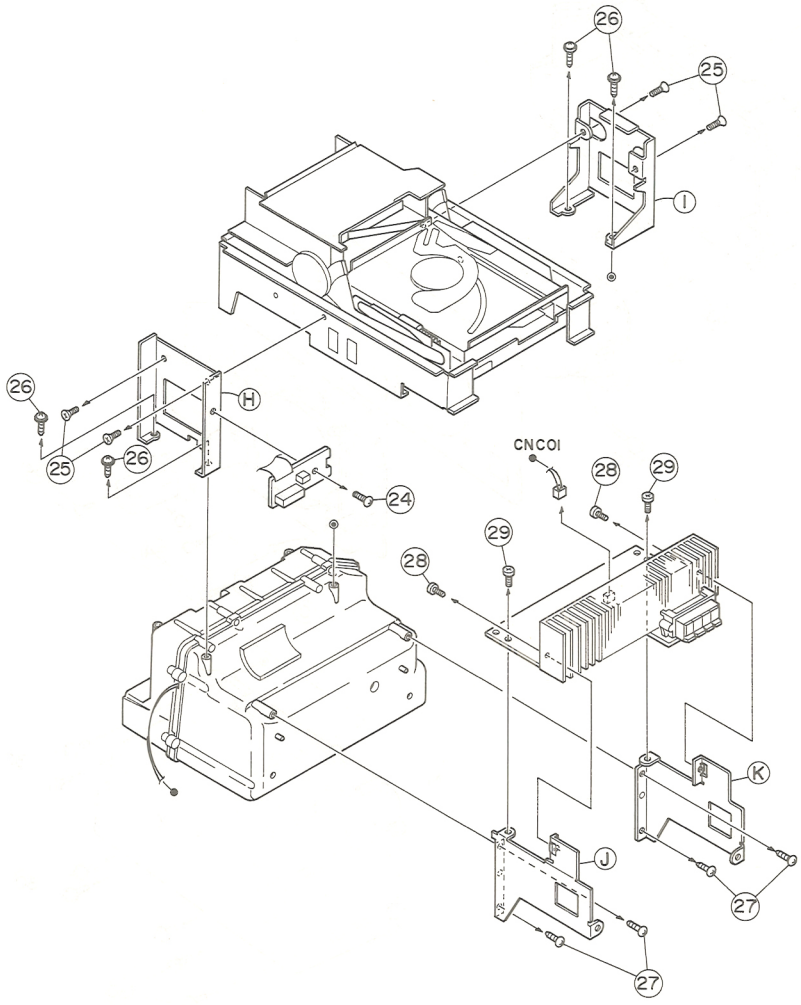

Fig. 7-4

(3) Connector CN303 Detach the 7 PIN plug extending from the operation leaf switch.
(4) Connector CN305 Detach the 2 PIN plug extending from the 3D/LIVE-EFFEX switch assembly.

2. Remove the four screws (14) retaining the preamplifier assembly.

■ Cassette Mechanism

1. Remove the six screws (15) retaining the cassette mechanism.
2. Press the EJECT buttons of both mechanisms, then open the cassette door and extract the cassette mechanism.

■ SEA/Function Switch Assembly

1. Removing the four screws (16) retaining the SEA assembly holder (F) will enable the SEA/Function Switch assembly to be extracted together with the holder (F).
2. When disengaging the SEA assembly, remove the two screws (17) retaining the SEA assembly holder (F).
3. When detaching the function switch assembly, remove the screw (18) retaining the function switch assembly.

■ CD Operation Assembly, Timer/LCD Assembly Holder

1. Removing the four screws (19) retaining the volume holder (G) will disengage the CD operation assembly and Timer/LCD assembly together.
2. When detaching the CC operation assembly, remove the screw (20) retaining the CD operation assembly.
3. When detaching the Timer/LCD assembly, remove the two screws (21) retaining the Timer/LCD assembly.

■ DTS (Digital Turning System) Assembly

1. Remove two screws (22) retaining the DTS assembly, then detach the assembly by sliding it downward.

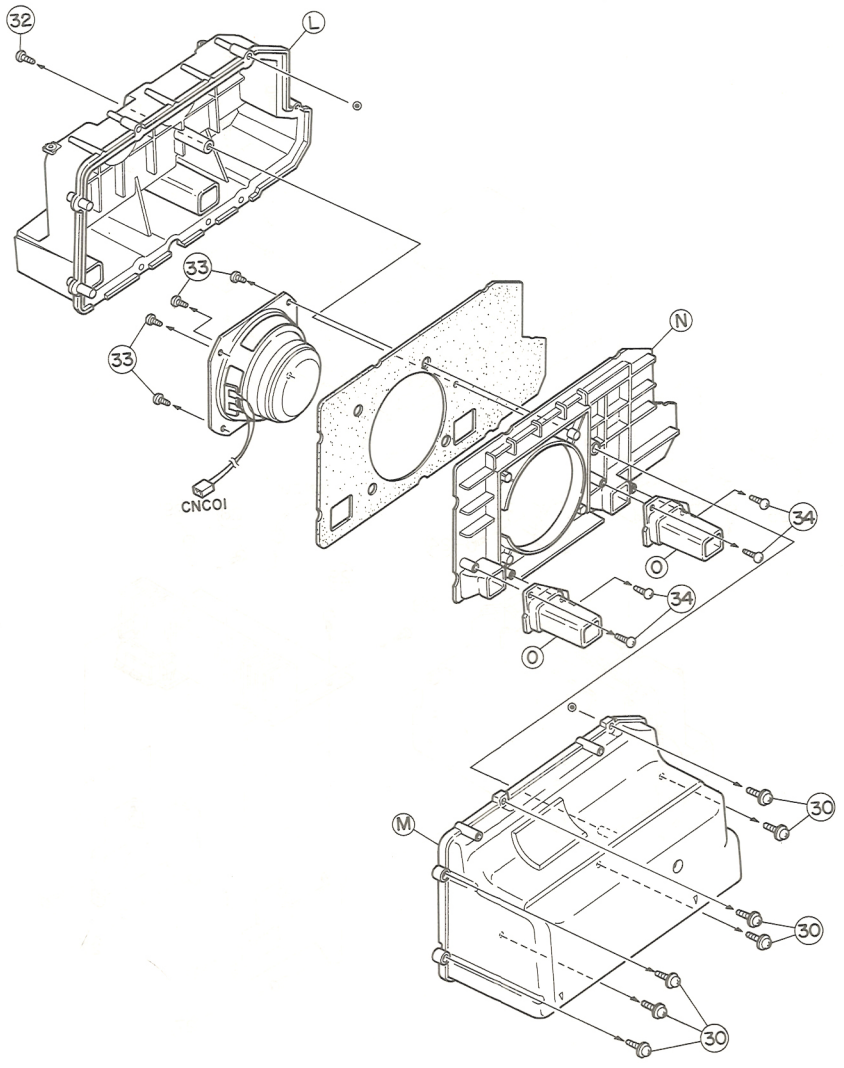

Fig. 7-5

■ 3D/LIVE EFFEX Switch Assembly

1. Remove the screw (23) retaining the 3D/LIVE EFFEX Switch assembly.
2. Remove the two pawls retaining the 3D/LIVE EFFEX switch assembly, then extract the assembly.

■ CD Changer Assembly/3D Unit

1. Remove the screw (24) retaining the relay assembly from the joint bracket (H).
2. Remove the four screws (25) retaining the left and right joint brackets (H) and (I) which retain the CD changer, then extract the CD changer.
3. Remove the four screws (26) retaining the joint brackets (H) and (I), then extract the 3D unit.
4. Remove the four screws (27) retaining the power amplifier assembly, then extract the power amplifier assembly.

■ Power Amplifier Assembly

1. Remove the plug of pin 2 protruding from the 3D unit from the connector CN C01.
2. Remove the four screws (28) (29) retaining the power amplifier assembly from the amp brackets (J) and (K).

■ 3D Unit's Disassembling Procedures

1. Remove the seven screws (30) retaining the 3D covers (L) and (M).
2. Remove the screw (32) retaining in position from the 3D cover (L) side.
3. Remove the four screws (33) retaining the speaker.
4. Remove the four screws (34) retaining the left and right ducts (D) from the 3D base (N).

■ CD Changer Description

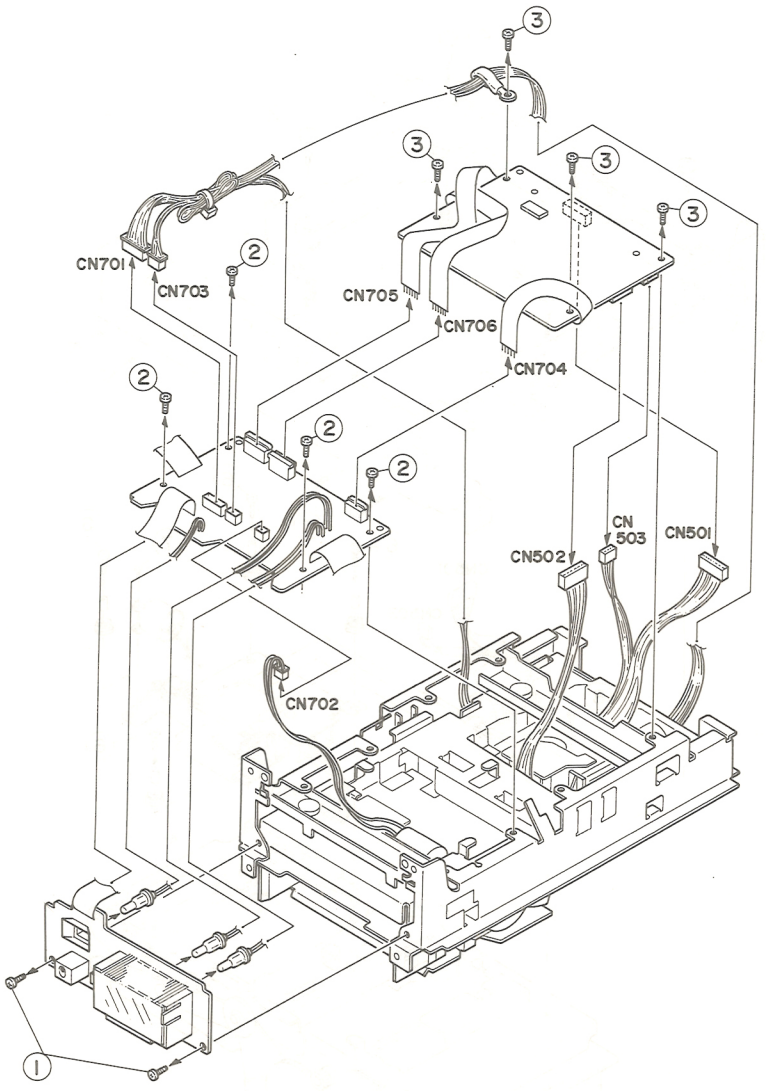

Fig. 7-6

■ LCD Board

Remove the two screws (1) retaining the LCD board and remove the left and right main frames.

■ CD Amplifier Board

1. Remove the four screws (3) retaining the CD amplifier board from the left and right main frames.
2. Remove the plugs (PIN 10, PIN 6, PIN 4) from the three connectors (CN501, CN502, CN503) on the CD amplifier board.

■ CD Changer Board

1. Remove the four screws (2) retaining the CD changer boards from the left and right main frames.
2. Remove the parallel wires from connectors CN705 and CN704 on the CD changer board.

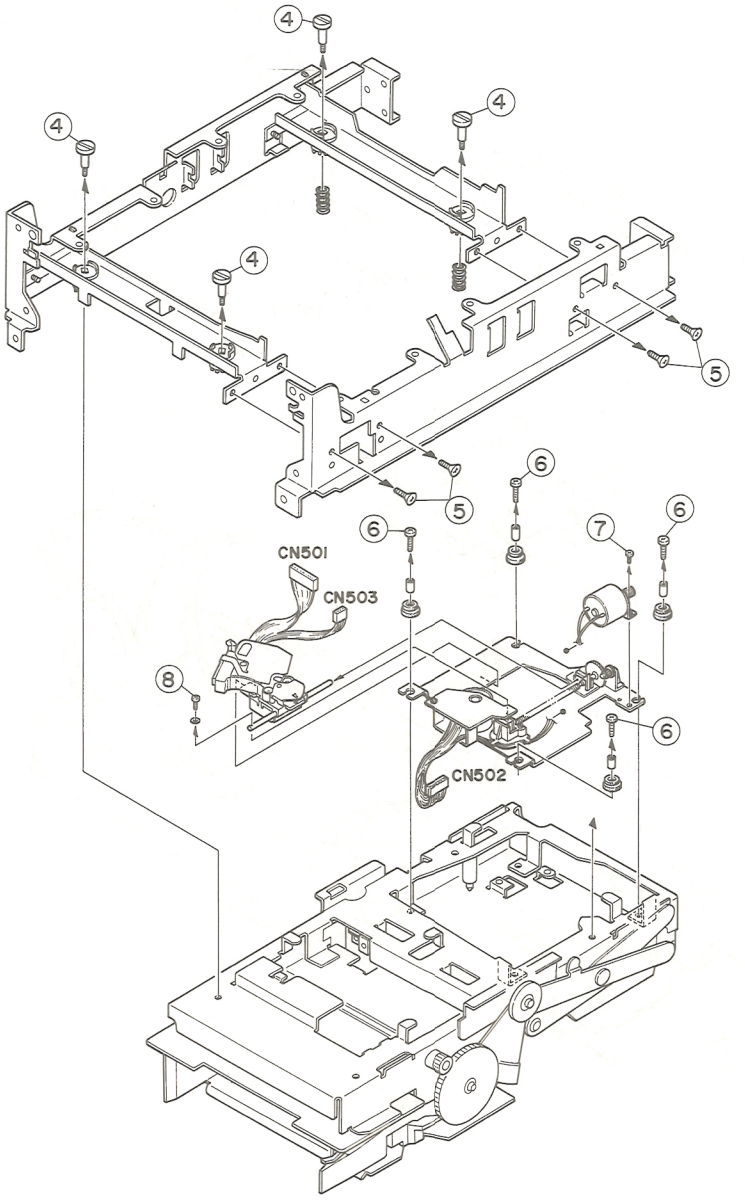

Fig. 7-7

■ Main Frame Assembly

1. Remove the four screws (4) retaining the left and right main frame assemblies from the mechanism chassis assembly.
2. Remove the four screws (5) retaining the right main frame and the sub frame. (In this case, the left main frame may also be removed if necessary.)
3. Use a nipper and cut the wire bind that is retaining the wiring along the left main frame.

■ Mechanism Base Unit

Remove the four screws (6) retaining the mechanism base unit from the mechanism chassis assembly.

■ Radial Servo Motor

Remove the screw (7) retaining the FEED servo motor from the mechanism base unit.

■ Pickup Unit

Remove the screw (8) retaining the pickup unit from the mechanism base unit.

■ Lifter Assembly

1. Remove the slit washers (9) retaining the left and right main gears, then remove the main gear.
2. Remove the four screws (10) retaining the left and right lift arm assemblies, then remove the left and right lift arm assemblies from the mechanism chassis assembly.
3. Remove the lifter assembly from the magazine holder assembly.

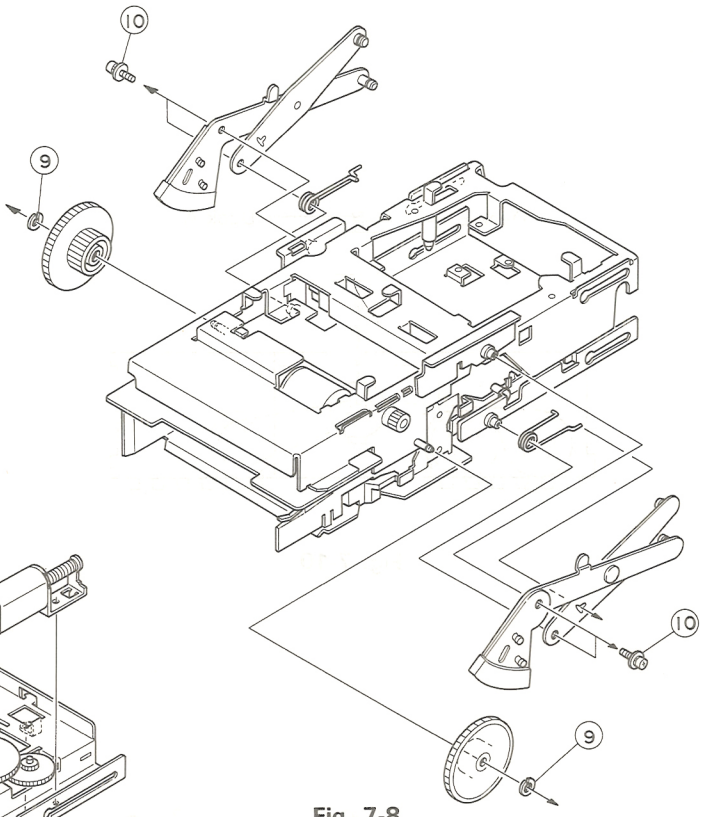

Fig. 7-8

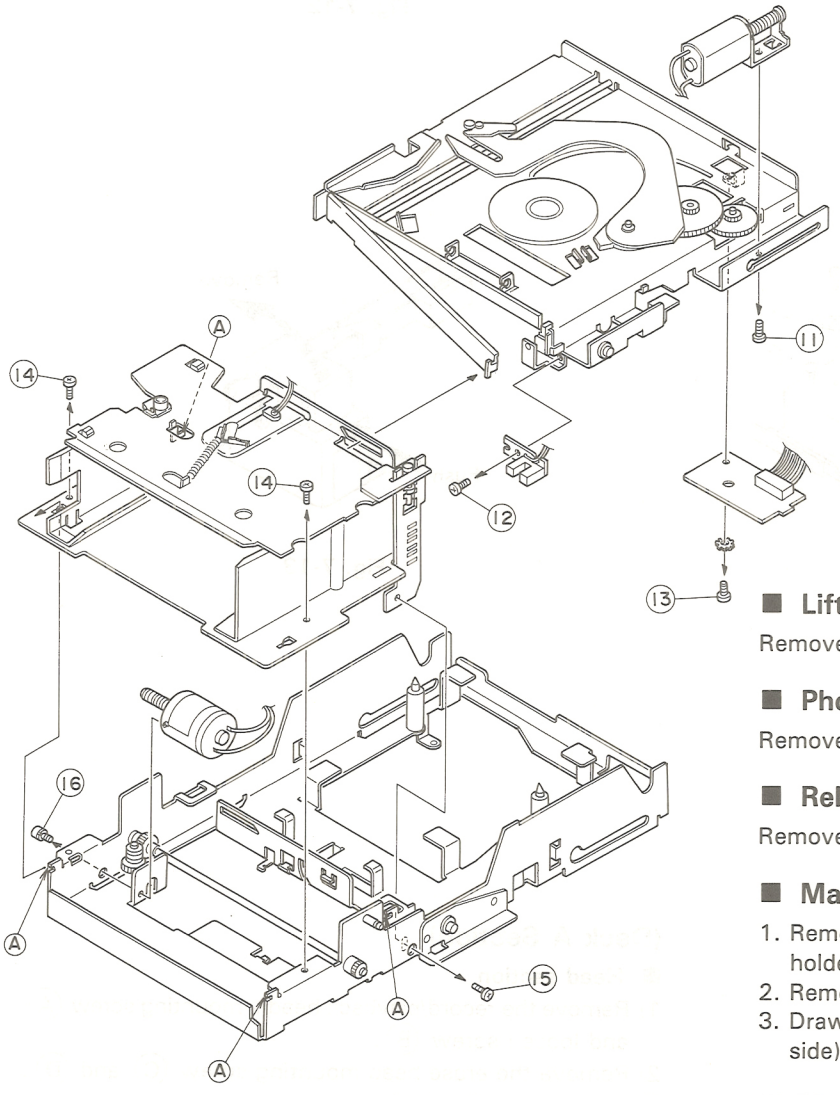

Fig. 7-9

■ Lifter Drive Motor

Remove the screw (11) retaining the tray drive motor.

■ Photo Sensor

Remove the screw (12) retaining the photo sensor.

■ Relay Board

Remove the screw (13) retaining the relay board.

■ Magazine Holder Assembly

1. Remove the two screws (14) retaining the magazine holder assembly.
2. Remove the screw (15) retaining the sensor plate.
3. Draw out the magazine holder assembly to this side (your side) and remove the four locks (A) .

■ Magazine Drive Motor

Remove the screw (16) retaining the (LIFTER) UP/DOWN drive motor.

■ Cassette Mechanism Description

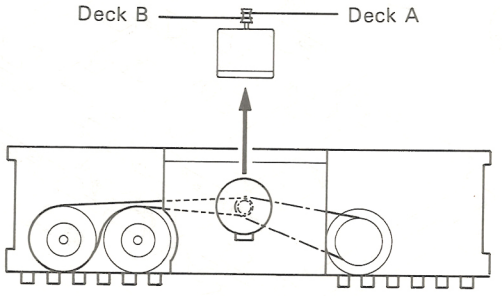

Fig. 7-10

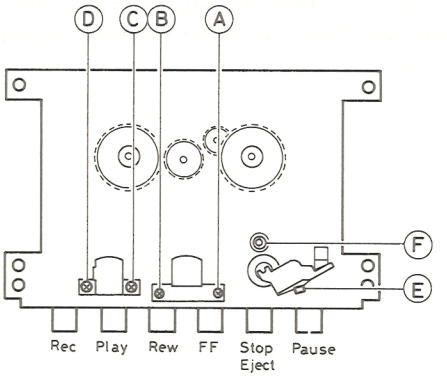

Fig. 7-12

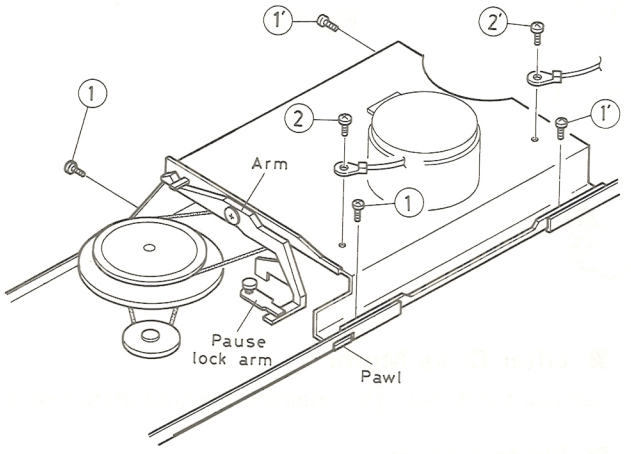

Fig. 7-11

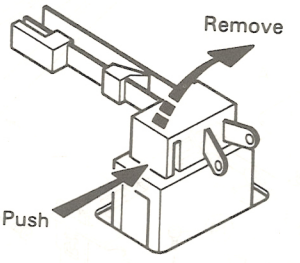

Fig. 7-13

■ **Motor bracket (See Fig. 7-10)**

1) Remove the two screws (1).
2) Remove a screw (2) securing the lug wire.
   • Remove (1') and (2') on Deck B.
3) Remove the chassis and M. bracket from the button side. Then remove the bracket arm (panel).
   (The synchro arm can be removed from the pause lock. Return the pause lock after it is removed from the proper position.)

(Deck A Section)

■ **Head section**

1) Remove the record/playback head's mounting screw (A) and loosen screw (B).
2) Remove the erase head mounting screw (C) and (D).

■ **Pinch roller (Deck A)**

Remove the pinch roller arm stopper (E).

■ **Flywheel ass'y (Deck A)**

1) Remove the C washer (F) securing the capstan shaft.
2) Pull out the flywheel ass'y.

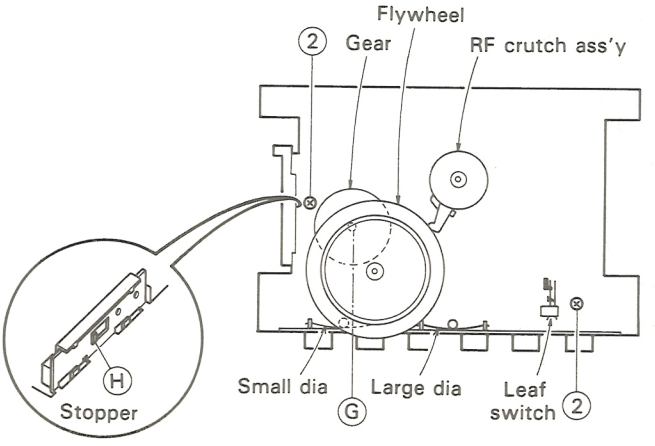

Fig. 7-14

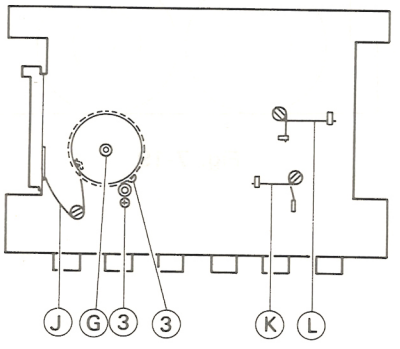

Fig. 7-15

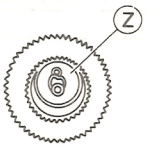

Fig. 7-16

■ **Removal of the button ass'y from the mechanical chassis.**

- Leaf switch
  Press the switch's lock panel and raise from the left to remove.

- Gear (Below the flywheel)
  Remove the C washer (G) securing the gear.
  For reassembly, insert the Sensing Lever arm stand into the (Z) section.

- Lock arm
  Press the arm stopper from window (H), and pull to remove.

- Chassis removal
  1) Remove the three (J), (K), and (L) springs.
  2) Remove the two screws (2).
  3) Remove the two screws (3) securing the capstan metal.
  4) Gently remove the button ass'y from the chassis.

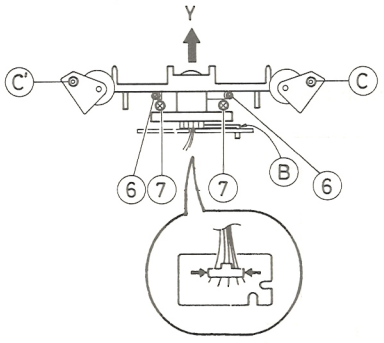

Fig. 7-17

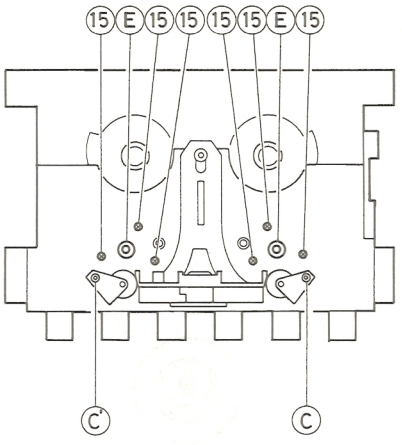

Fig. 7-18

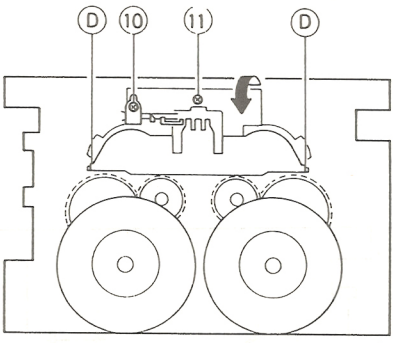

Fig. 7-19

(Deck B Section)

■ **Head assembly**

1) Disconnect wiring of the head. (The wire clamp can be taken off by pressing it in the direction of the arrow mark shown in the figure.) (See Fig. 7-17)
2) Remove two screws (6) securing the head assembly.
3) Remove two adjusting screws (7).
4) Slightly lifting the head assembly upward, pull it in the direction of Y shown in the figure to make the shaft (B) free from engagement.

■ **Pinch roller**

The pinch roller can be removed by disengaging washers (C) and (C').

■ **Disk unit assembly**

1) Remove a screw (10) securing the motor switch.
2) Remove a screw (11) securing the disk base bracket.
3) Setting up the disk base unit disengage the pawl of the (D), and then remove the disk unit assembly with careful attention not to overstrain the gears.
(Removing the flywheel beforehand eases the work of this step.)

Flywheel assembly

Remove a washer (E) securing the flywheel assembly. (At this step, be careful not to miss a flat washer set below the washer (C).)

T. cam gear

T. cam gears can be disengaged by removing the C-shape washer (E).
(Pay attention to left and right gears which are different each other.)

■ Speaker Box Description

This player's speaker panel assembly and rear panel assembly are bonded onto the speaker box, so disengage them by the following procedures.

- **Disengagement of speaker panel assembly**

1. As shown in fig. 7-20, insert a standard screwdriver in the hole of the part connecting the speaker panel assembly and speaker box, apply the principle of the lever and remove the adhered bonding, then disengage the speaker panel.

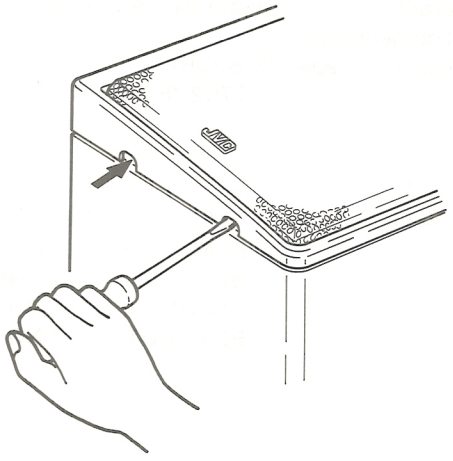

Fig. 7-20

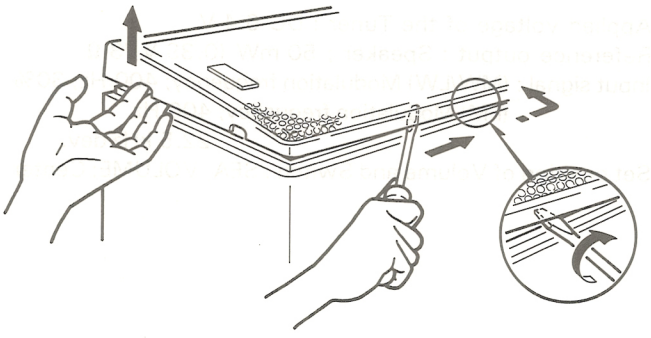

Fig. 7-21

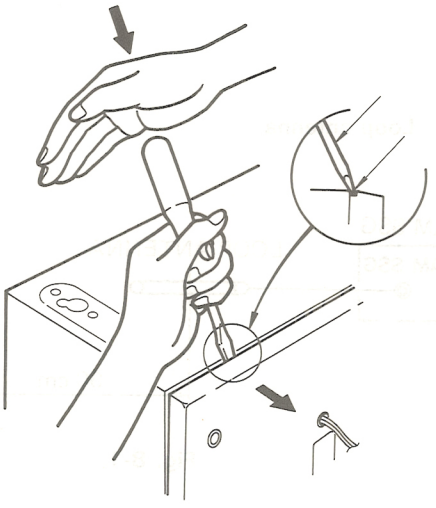

Fig. 7-22

2. As shown in Fig. 7-21, insert a hand in the opened space between the speaker panel assembly and speaker box, then use the other hand to insert a standard screwdriver alongside the speaker box's lateral face and scrape off the bonding while turning the wide tip of the screwdriver.

- **Removal of rear panel**

As shown in Fig. 7-22, insert a standard screwdriver between the rear panel and speaker box, then scrape off the bonding by little striking the screwdriver's handle with a hand.

8 Main Adjustments

■ Equipment and Measuring Instrument used for Adjustments

Electronic voltmeter
Audio frequency oscillator
Attenuator
Wow-flutter meter
Frequency counter
Standard signal generator
Torque testing cassette gauge CTG-N
Alignment tape
Measuring tape: TS-8 (UR)
VTT702 (8 kHz)

■ Condition for Measurement

Power supply..... AC 120/220/240 V (50/60 Hz)
DC 12 V
Reference output .. Speaker : 0 dBs (0.775 V)/4 Ω
Headphone: – 10 dBs (0.24 V)/32 Ω
Reference input..... PHO/NO : – 6 dBs
CD OUT IN: – 48 dBs

Function position .. TAPE/FM MODE: TAPE NORMAL
FUNCTION : NORMAL SPEED
SEA : Center
VOLUME : Center
BEAT CUT : NORMAL

■ Condition for Measurement : Tuner Section

Applied voltage of the Tuner : DC 6.4 V
Reference output : Speaker ; 50 mW (0.39 V)/3 Ω
Input signal : (MW/LW) Modulation frequency; 400 Hz, 30%
(FM) Modulation frequency; 400 Hz
22.5 kHz dev.
Set position of Volume and Switch : SEA; VOLUME; Center

Attentive point
Connection of IF sweeper:
Connect a 30 pF capacitor and a 33 kΩ resistor in series to the sweeper's output while 0.082 μF capacitor and a 100 kΩ resistor in parallel to the input.
IF sweeper's output level:
Set as minimum as enough for adjustment.
FM MPX adjustment:
For this adjustment, connect a 100 kΩ resistor in series to a frequency counter's input.

Loop antenna

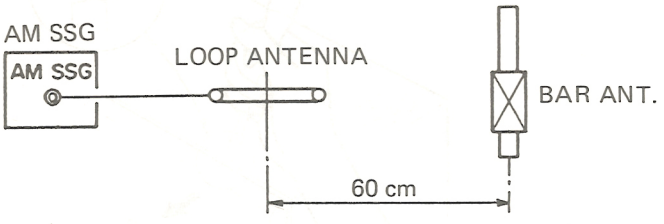

Fig. 8-1

■ Tuner Alignment

BASIC CONDITIONS

POWER SOURCE OF THE RECEIVER	DC 12 V, AC 110-120/220-240 V (Tuner imput: DC 5.8 V)
LOAD RESISTANCE OF THE RECEIVER	50 mW (0.45 V)/4 Ω
MODULATION OF SSG	MW/LW: 400 Hz. 30% FM: 400 Hz 22.5 kHz DEV:

Item	Description
1. MW/LW IF ALIGNMENT (The unit should not usually require adjustment. Follow the steps below when adjustments are necessary).	
1-1 Conditions of the receiver.	
(1) Power source:	DC 5.8 V (When the power is supplied directly to the tuner in the receiver, the voltage should be adjusted to the proper level which shall be required by the tuner.)
(2) Function switch position:	RADIO
(3) Band select switch:	MW/LW
(4) Volume control:	Minimum gain position
(5) SEA control:	Center position
(6) Reception frequency:	Set the reception frequency to the highest position and to the position where the signal does not enter.
1-2 Connection of Sweeper and the receiver	
(1) Tuner input:	Positive side to TP3
(2) Tuner output:	Positive side to TP6 Negative side to TP7]
1-3 Aligning position:	CFT, T2
1-4 Alignment (Waveform): 450 kHz(455 kHz) 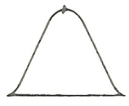	Adjust AM I.F.T. (above mentioned aligning position) so that maximum and symmetrical wave form can be obtained. In this case, the wavehead should be appeared at the center marker (450 kHz) on the scope of Sweeper.
2. FM IF ALIGNMENT (The unit should not usually require adjustment. Follow the steps below when adjustments are necessary).	
2-1 Conditions of the receiver	
(1) Power source:	Same as mentioned in item 1-1
(2) Function switch position:	RADIO
(3) Band select switch:	FM
(4) Volume control:	Minimum gain position
(5) SEA control:	Center position
(6) Reception frequency:	Set the reception frequency to the highest position and to the position where the signal does not enter.
2-2 Connection of Sweeper and the receiver	
(1) Tuner input:	Positive side to TP5
(2) Tuner output:	Positive side to TP6 Negative side to TP7
NOTE a) Attach a capacitor (30 pF) and resistor (33 kΩ) to the positive side cable which shall be led from Sweeper output. b) Attach a resistor (100 kΩ) in series to the positive side cable which shall be led from Sweeper input.	
2-3 Aligning position:	Discriminate Waveform: T1 ("S" curve waveform)
2-4 Alignment (Waveform): 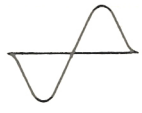	
NOTE The discriminator's CF is yellow. Do not use one that is of another color.	Adjust the discriminate T1 so that above symmetrical IF waveform may be changed to balanced "S" curve waveform.

Item	Description
3. MW RF ALIGNMENT	
3-1 Conditions of the receiver.	
(1) Power source:	Same as mentioned in item 1-1.
(2) Function switch position:	RADIO
(3) Volume control:	50 mW
(4) SEA control:	Center position
(5) Variable capacitor:	Refer the following list shown in item 3-4.
3-2 Conditions of SSG.	
(1) Modulation:	Refer the basic condition
(2) Frequency:	Refer the following list shown in item 3-4.
(3) Output level of the attenuator in SSG:	Approx. 50 mW
3-3 Output measuring position:	Speaker terminals
3-4 Alignment:	

Step	Band Select Switch Position	Sort of Antenna to be attached to SSG	Frequency of SSG	Preset Memory No.	Aligning Position
1	MW	Loop Antenna	Refer to the adjustment directions on the next page regarding adjustment of the transmission frequency.		
2					
3					
4			603 kHz	to be received 600 kHz (M2)	L3
5			1,404 kHz	to be received 1,500 kHz (M4)	TC2
6			Adjust the above aligning position (L3 & TC2) repeatedly so that the tuner can be obtained the best sensitivity.		

Item	Description
4. LW RF ALIGNMENT	
4-1 Conditions of the receiver.	
(1) Power source:	Same as mentioned in item 1-1.
(2) Function switch position:	RADIO
(3) Volume control:	50 mW
(4) SEA control:	Center position
(5) Variable capacitor:	Refer the following list shown in item 4-4.
4-2 Conditions of SSG.	
(1) Modulation:	Refer the basic condition
(2) Frequency:	Refer the following list shown in item 4-4.
(3) Output level of the attenuator in SSG:	Approx. 50 mW
4-3 Output measuring position:	Speaker terminals
4-4 Alignment:	

Step	Band Select Switch Position	Sort of Antenna to be attached to SSG	Frequency of SSG	Preset Memory No.	Aligning Position
1	LW	Loop Antenna	288 kHz	M5	L6
2					
3			Align L6 position so that voltage for TP9 becomes 4.5±0.02 V.		
4			162 kHz	to be received 162 kHz (M2)	L4
5			270 kHz	to be received 270 kHz (M4)	TC4
6			Adjust the above aligning position (L4 & TC4) repeatedly so that the tuner can be obtained the best sensitivity.		

Item	Description
5. FM RF ALIGNMENT	
5-1 Conditions of the receiver.	
(1) Power source:	Same as mentioned in item 1-1.
(2) Function switch position:	RADIO
(3) Band select switch:	FM
(4) Volume control:	50 mW
(5) SEA control:	Center position
(6) Reception frequency:	Refer the following list shown in item 5-4.
4-2 Condition of FM SSG.	
(1) Modulation:	Refer the basic condition
(2) Frequency:	Refer the following list shown in item 5-4.
5-3 Connection of sweeper and the receiver.	
(1) Tuner input	Positive side to TP1. Negative side to TP2.
(2) Output measuring position	Speaker Terminal
5-4 Alignment:	

Step	Band Select Switch Position	Sort of Antenna to be attached to SSG	Frequency of SSG	Preset Memory No.	Aligning Position
1	FM	Dummy Antenna 75 Ω Unbalanced	108 MHz	M5	L1
2			Adjust L1 until the voltage of TP9 becomes 4.4±0.02 V.		
3					
4			88 MHz	to be received 88 MHz (M2)	L2
5			106 MHz	to be received 106 MHz (M4)	TC-2
6			Adjust the above aligning position (L2 & TC-2) repeatedly so that the tuner can be obtained the best sensitivity.		

Adjustments after AM oscillation circuit replacement

Initial setting

① Turn L5 one revolution in a clockwise direction and set TC3 at the center position.
② Press M5 until 1710 kHz is displayed.
③ Adjust L5 so that the voltage at TP9 equals 4.6 V ±0.05 V.
④ Press M1 until 530 kHz is displayed.
⑤ Adjust TC5 so that the voltage at TP9 equals 1.0 V ±0.02 V.
⑥ Repeat steps ② to ⑤.
⑦ If the voltage of TP9 does not descend to 1.2 V ±0.02 V in response to the adjustments in ⑤, re-adjust L5 while retaining the same adjustment conditions so that the voltage at TP9 becomes 1.0 V ± 0.02 V.
⑧ After carrying out step ⑦, be sure to press M5 so that 1710 kHz is displayed and confirm that the voltage of TP9 is 4.8 V or less.

■ Location of Adjustments: Tuner Section

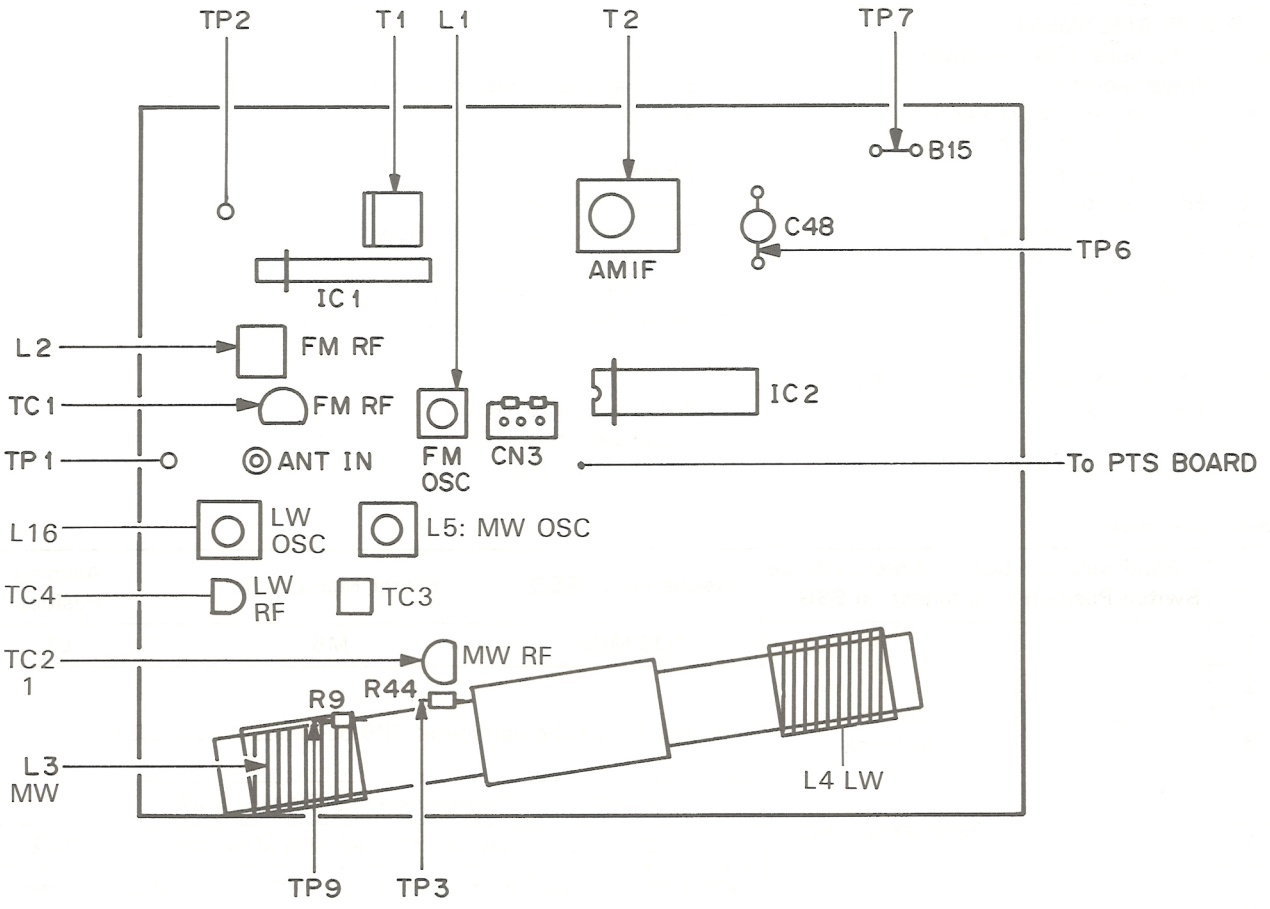

Fig. 8-2

■ Main Adjustment : Mechanism and Amplifier Sections

Item	Measuring Conditions and Main Adjustments	Standard Value	Adjusting Point
Head azimuth adjustment (Both A and B mechanisms)	[Conditions] 1. Mode : PLAY 2. Test tape : VTT703 (10 kHz) 3. Measuring point : Headphone OUT [Adjustment] 1. Connect an electronic voltmeter to the speaker terminal. 2. Play back the test tape VTT703. 3. Adjust the head azimuth with screw Ⓐ (Fig. 8-3) until the reading of the electronic voltmeter becomes – 1 dB from the peak. 4. Adjust to peak between FWD/REV within – 4 dB from the peak.	– 1 dB from the peak	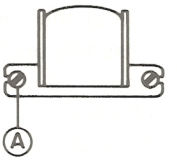 Fig. 8-3
Tape speed and wow-flutter adjustment	[Conditions] 1. Mode : PLAY, Normal speed 2. Test tape : VTT712 at tape end 3. Measuring point : Headphone OUT [Adjustment & Confirmation] 1. Connect a wow-flutter meter to headphone out. 2. Play back the test tape VTT712 at tape end to B mechanism. 3. B mechanism: Adjust semi-fixed resistor VR301 in the motor so that tape speed is within 2990–3010 Hz at normal speed. A mechanism: Against B mechanism, tape speed is within ±80 Hz. 4. Check to see if reading of the meter is less than 0.24% (JIS WTD).	Normal speed: 2990–3010 Hz High speed: 5100–5700 Hz Wow-flutter: less than 0.24% (JIS WTD)	VR301

<table>
<tr><th>Item</th><th>Measuring Conditions and Main Adjustments</th><th>Standard Value</th><th>Adjusting Point</th></tr>
<tr><td>Playback frequency response confirmation (Both A and B mechanisms)</td><td>[Conditions]
1. Test tape : VTT739
2. Mode : PLAY, Normal speed
3. Measureing point : TP/CN304
[Confirmation]
1. Mode : Normal
A/B mechanism : Play back the test tape VTT739 difference level against 1 kHz.
1 kHz/63 Hz : within −2 ±4 dB
1 kHz/10 kHz : within 0 ±3 dB
2. Mode : Metal/CrO_2
Play back VTT739 and to check the difference between Normal position and Metal/CrO_2 position at headphone out.
10 kHz : within −4 dB ±2 dB.</td><td>A/B mechanism,
Normal
1 kHz/63 Hz:
−2 ±4 dB
1 kHz/10 kHz
0 ±3 dB
B mechanism,
Metal/against
Normal position
within
−4 dB ±2 dB</td><td></td></tr>
<tr><td>Bias frequency confirmation</td><td>[Conditions]
1. Measuring point : TP/CN309 connector PIN
2. Mode : Mechanism A ... REC/PAUSE
<table><tr><th>Beat Cut Switch</th><th>Bias frequency</th></tr><tr><td>1 (Normal)</td><td>68 kHz ± 0.5 kHz</td></tr><tr><td>2</td><td>70 kHz ± 1 kHz</td></tr><tr><td>3</td><td>70 kHz</td></tr></table></td><td></td><td>—</td></tr>
<tr><td>Recording and playback frequency response adjustment</td><td>[Conditions]
1. Test tape : UR (TS8)
2. Signal input : CD out jack IN
3. Recording level : Reference (−6 dBs) −20 dB 1 kHz; −6 dBs
4. Measuring point : TP; CN304 connector
[Adjustment]
1. Reference signal −6 dBs to be applied to CD out jack IN.
2. Adjust the VR104 (L ch) and VR204 (R ch) so that 10 kHz against 1 kHz becomes 0 ±1 dB.</td><td>1 kHz/10 kHz:
0 ±1 dB</td><td>VR104 : L ch
VR204 : R ch</td></tr>
<tr><td>Playback output level adjustment</td><td>[Conditions]
1. Mode : PLAY
2. Test tape : VTT724 (1 kHz)
3. Measuring point : TP of CN304 connector
[Adjustment]
1. Mechanism A
Adjust the VR101 (L ch) and VR201 (R ch) so that the output of TP; CN304 connector becomes −11 dBs.
2. Mechanism B
Adjust the VR102 (L ch) and VR202 (R ch) so that the output of TP; CN304 connector becomes −11 dBs.</td><td>−11 dBs ±1 dB at TP; CN304 connector</td><td>1. Mechansim A
L ch : VR101
R ch : VR201
2. Mechanism B
L ch : VR102
R ch : VR202</td></tr>
<tr><td>Rec./playback sensitivity adjustment</td><td>[Conditions]
1. Mode: REC, PLAY ..... Mechanism B
2. Test tape: UR (TS8)
3. Measuring point: input ..... CD out jack in
output ... TP; CN304 connector
[Adjustment]
1. Reference signal 1 kHz; −6 dBs to be applied to CD out jack in.
2. Adjust the VR203 (L ch) and VR103 (R ch) so that 1 kHz −6 dBs against monitor level becomes 0 ± 1 dB.</td><td>0 ± 1 dB</td><td>L ch : VR203
R ch : VR103</td></tr>
</table>

■ Location of Adjustments: Amplifier Section

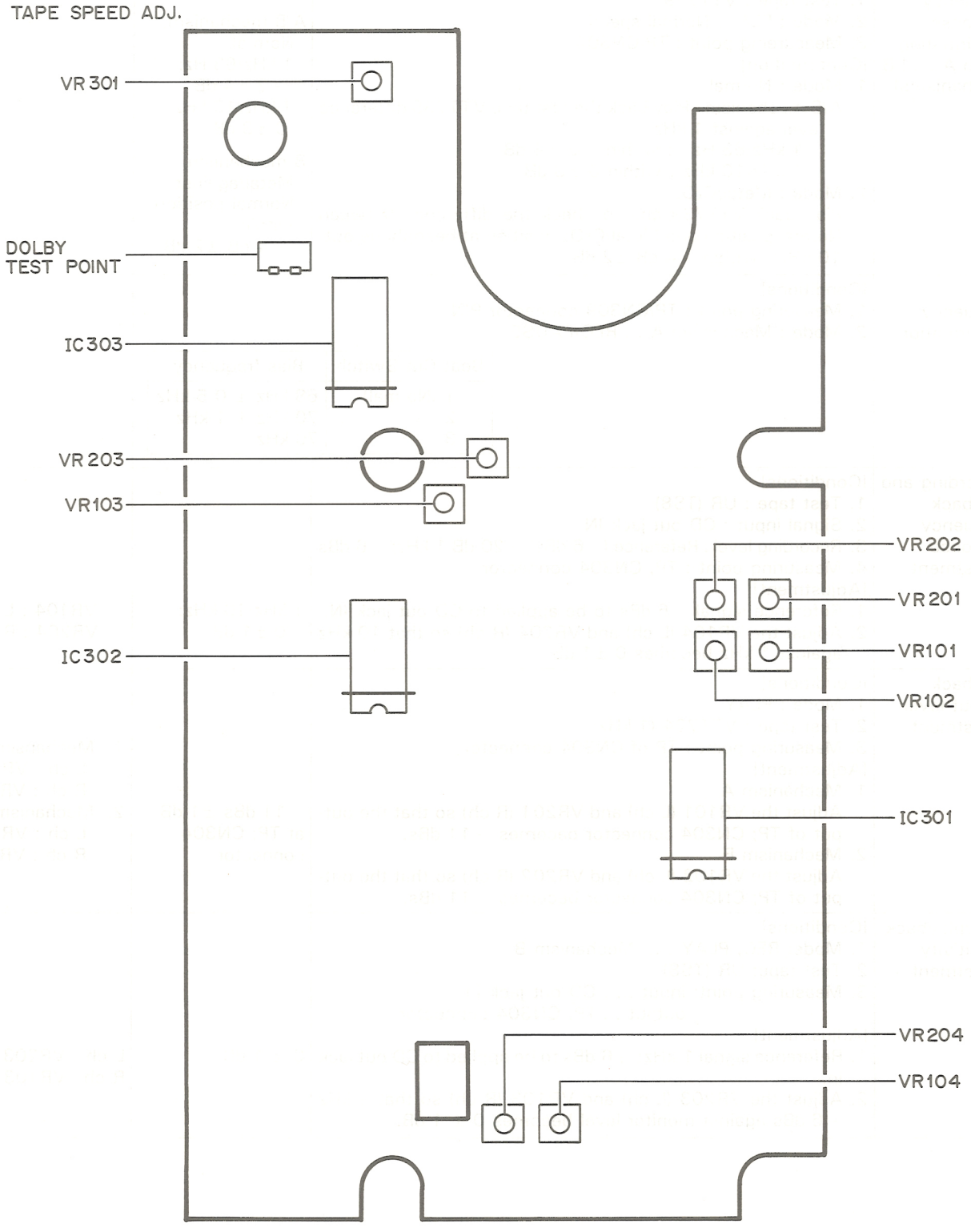

Fig. 8-4

■ Location of Adjustments: CD control board

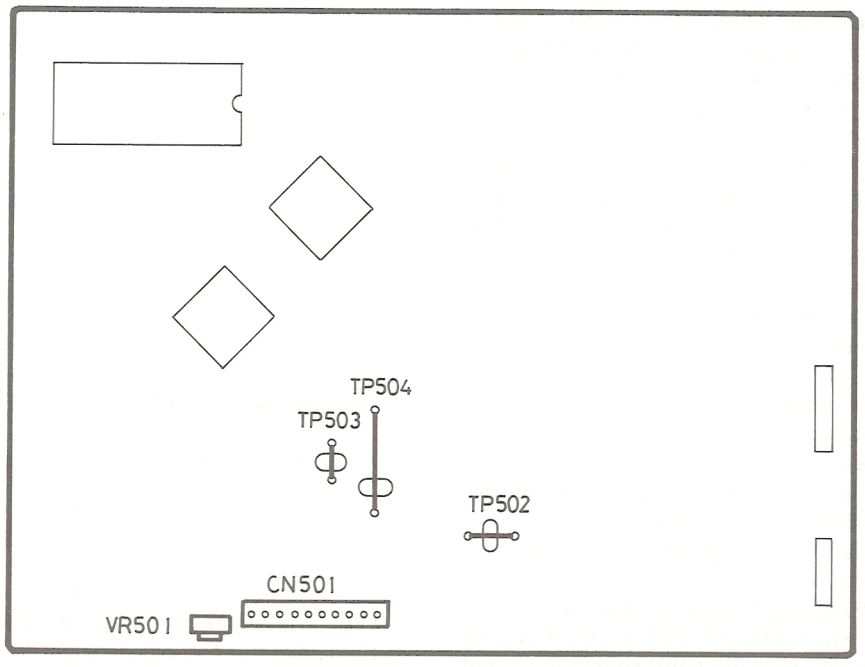

Fig. 8-5

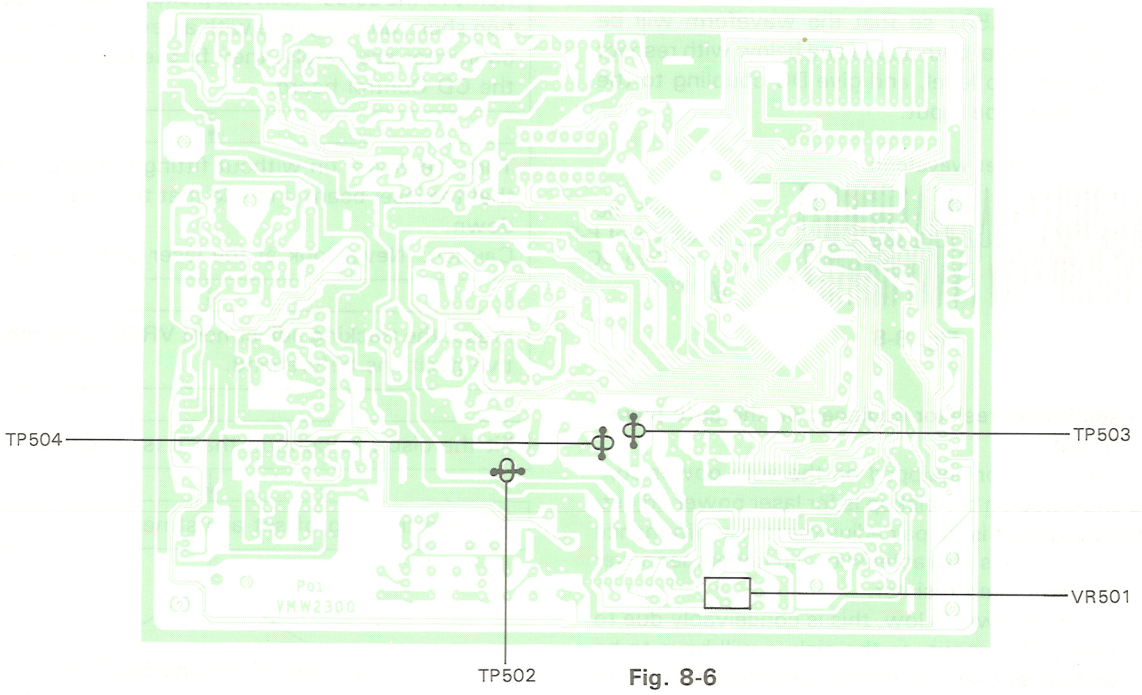

Fig. 8-6

■ Trouble-shooting of CD mechanism

Switch to the CD position and display ''00 00 00'' after a few seconds, and if the tray lies engaged on the lifter, the (LIFTER) UP/DOWN motor or the tray motor can be actuated by performing the following operations, so make the tray removable and turn the motor, then remove the tray and re-switch the power ON. If ''00 00 00'' is not displayed, repeat these operations all over again.

① In CD position, switch the power ON and display ''00 00 00,'' then shortcircuit TP701. This will switch all LCDs to ON and open TP701. (The test mode is provided.)

② The following operations are possible with remote-control:

[VOL UP] → Lifter UP
[VOL DOWN] → Lifter DOWN
[LIVE EFFEX] → Tray SET
[MUTE] → Tray RACK

③ After removing the tray magazine by operation ②, cut the power OFF.

④ Next insert a magazine, and if it cannot be worked properly, the mechanism itself may be faulty.

■ CD Changer Adjustment

• State of CD unit

The term "State of CD Unit" refers to the state in which the CD mechanism and CD control board (VMW2300) CD changer control board (VMW1231) are assembled. Accordingly, maintenance and other service operations are performed in a "State of CD unit."

(1) When using the DC stabilization power source, connect FW702's terminals ⑥, ⑦ and ⑩ and ground them, then impress 9.1 V on terminal ⑧. Shortcircuiting FW701's terminals ⑤ and ⑥ will enable operation by remote control.

(2) The audio output's load resistance is 47 kΩ. Also, inputting into AUX IN will enable monitoring.

• Tracking offset adjustment

Adjustment tools: Oscilloscope, normal disc

Adjustment procedures:

(1) Connect the oscilloscope to the hot side TP503, and the earth side TP502 to the earth side.

(2) Playback the normal disc and confirm that tracking error signals are generated.

(3) As TP504 and TP502 stop 3 seconds after being short-circuited, instantly short-circuit TP701 and start the test mode (at this time, all LCDs will light) so that it will not stop, and so that adjustment can be easily made. Make sure to turn on the power after completed adjustment.

Note: Adjust VR501 so that the waveform will be symmetrical both above and below with respect to the zero level, and give DC coupling to the oscilloscope input.

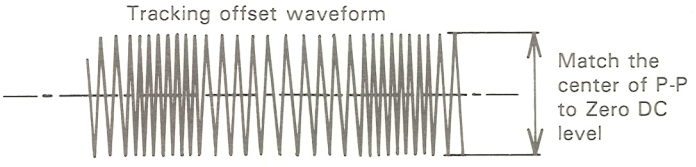

Fig. 8-8

• On the semi-fixed resistor equipped on the auto power control board

The semi-fixed resistor equipped on the auto power control board and fitted on the pickup is for laser power adjustment. This adjustment is for pair adjustment in conformance with the optical block's characteristics, so remember never to touch this semi-fixed resistor.

If the laser beam's power is low, this is conceivably due to the laser diode's life runout, so the pickup will have to be replaced. Remember that turning the semi-fixed resistor of a normal pickup will cause an overcurrent to damage the pickup.

• Grating Adjustment

Grating adjustment is performed in units of components to attain their optimum states. Improper adjustment will cause the laser beams to go off-track any may render musical performance impossible.

• Procedures for Pickup Changing

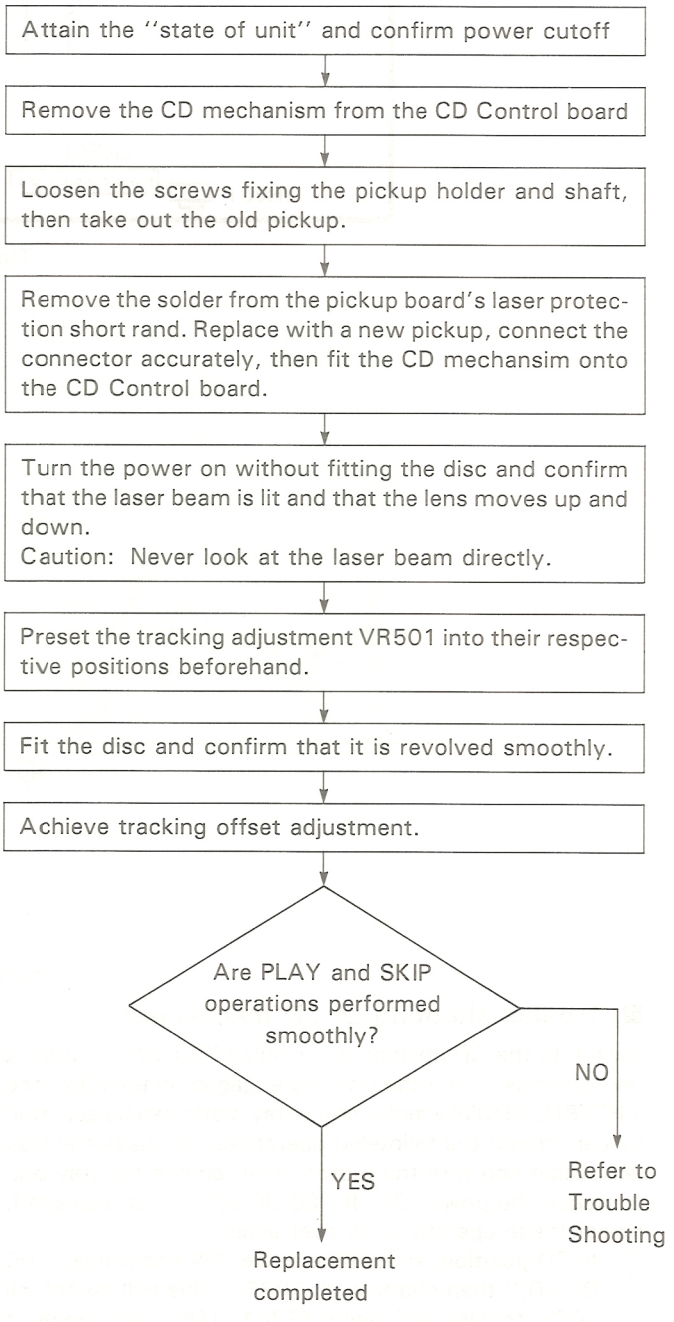

Fig. 8-9

■ General Section

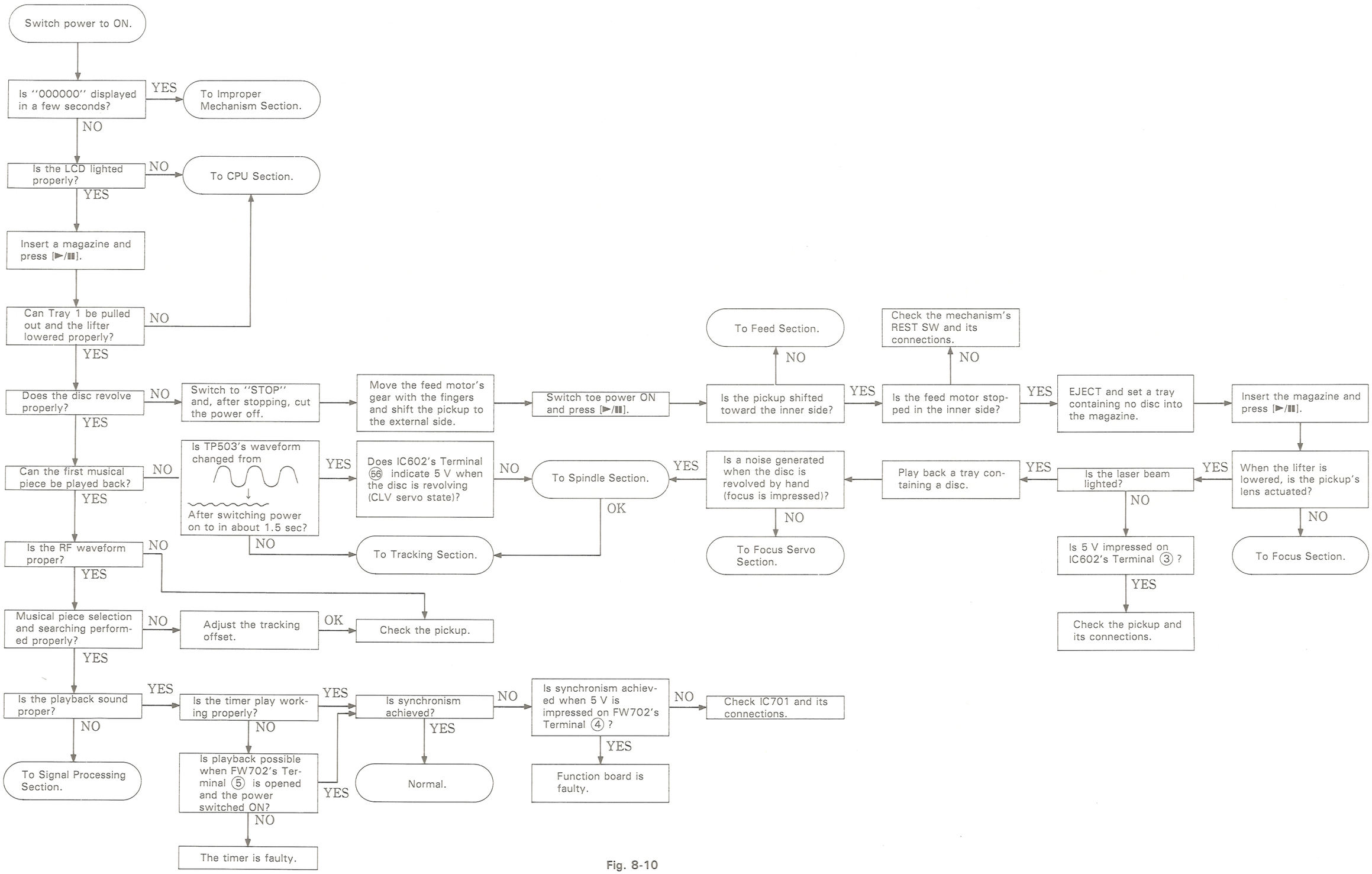

Fig. 8-10

■ CPU Section (When A Proper Voltage Is Impressed on Each Power Source Terminal)

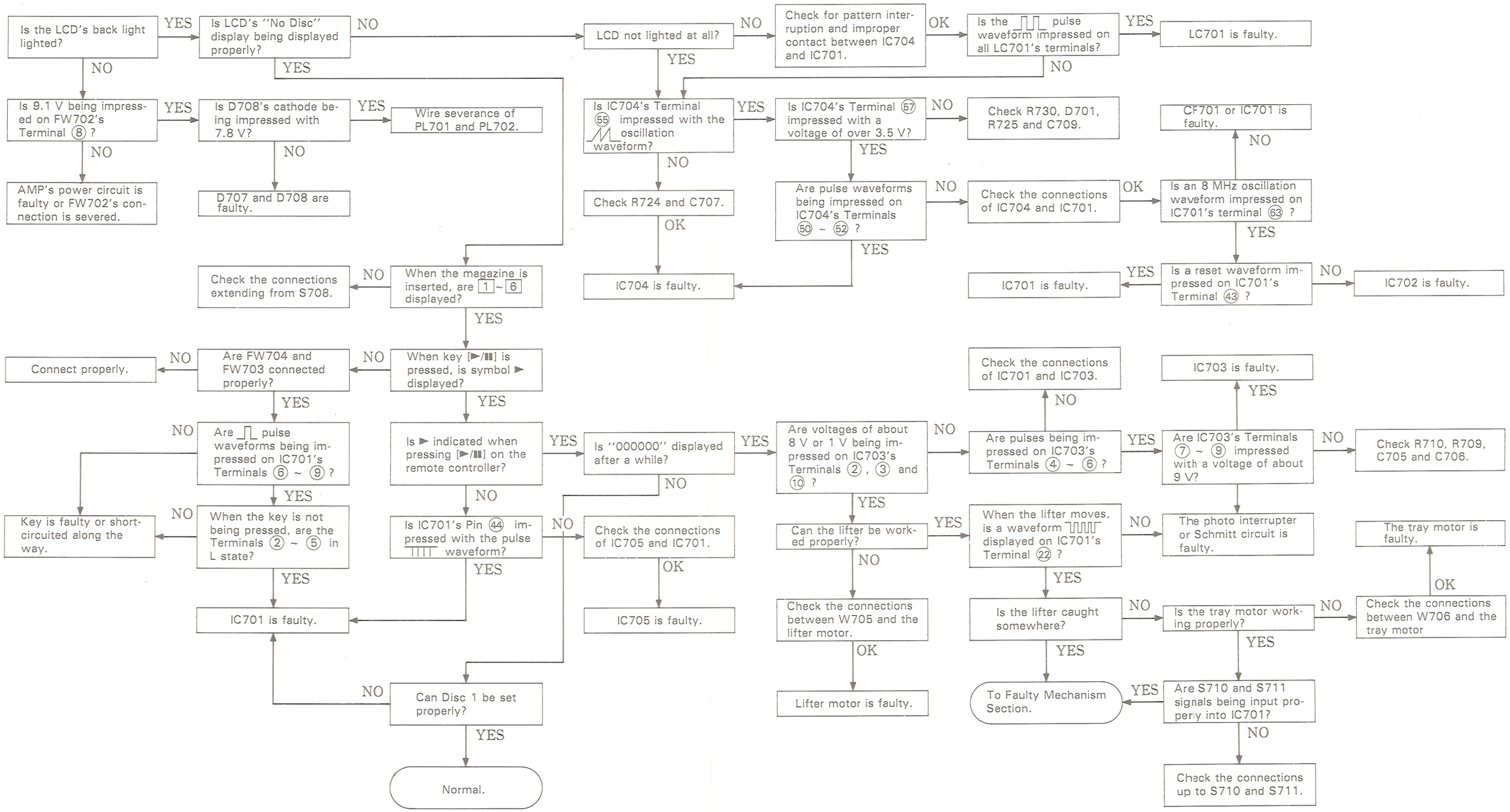

Fig. 8-11

■ Tracking Section

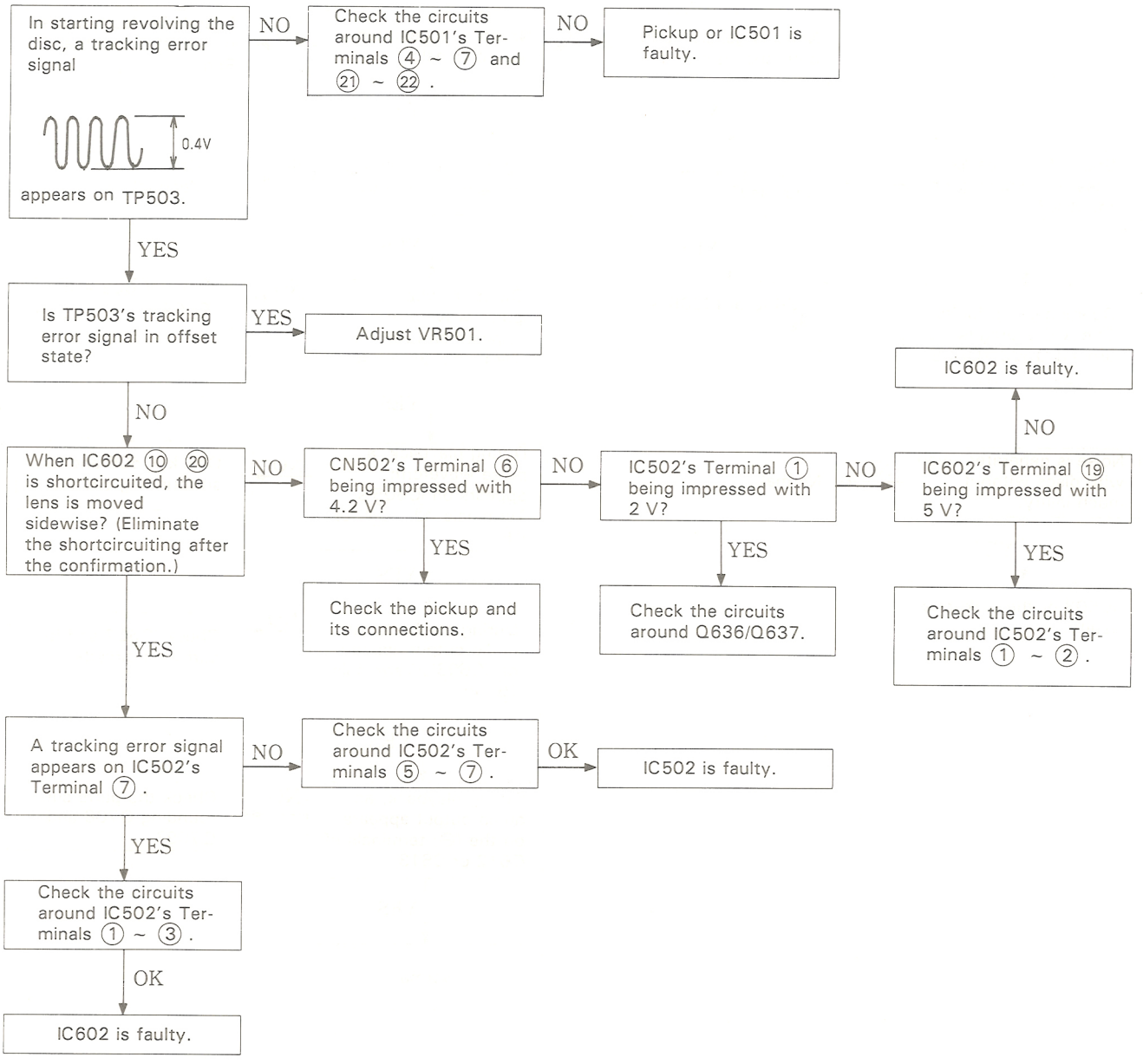

Fig. 8-12

■ Signal Processing Section

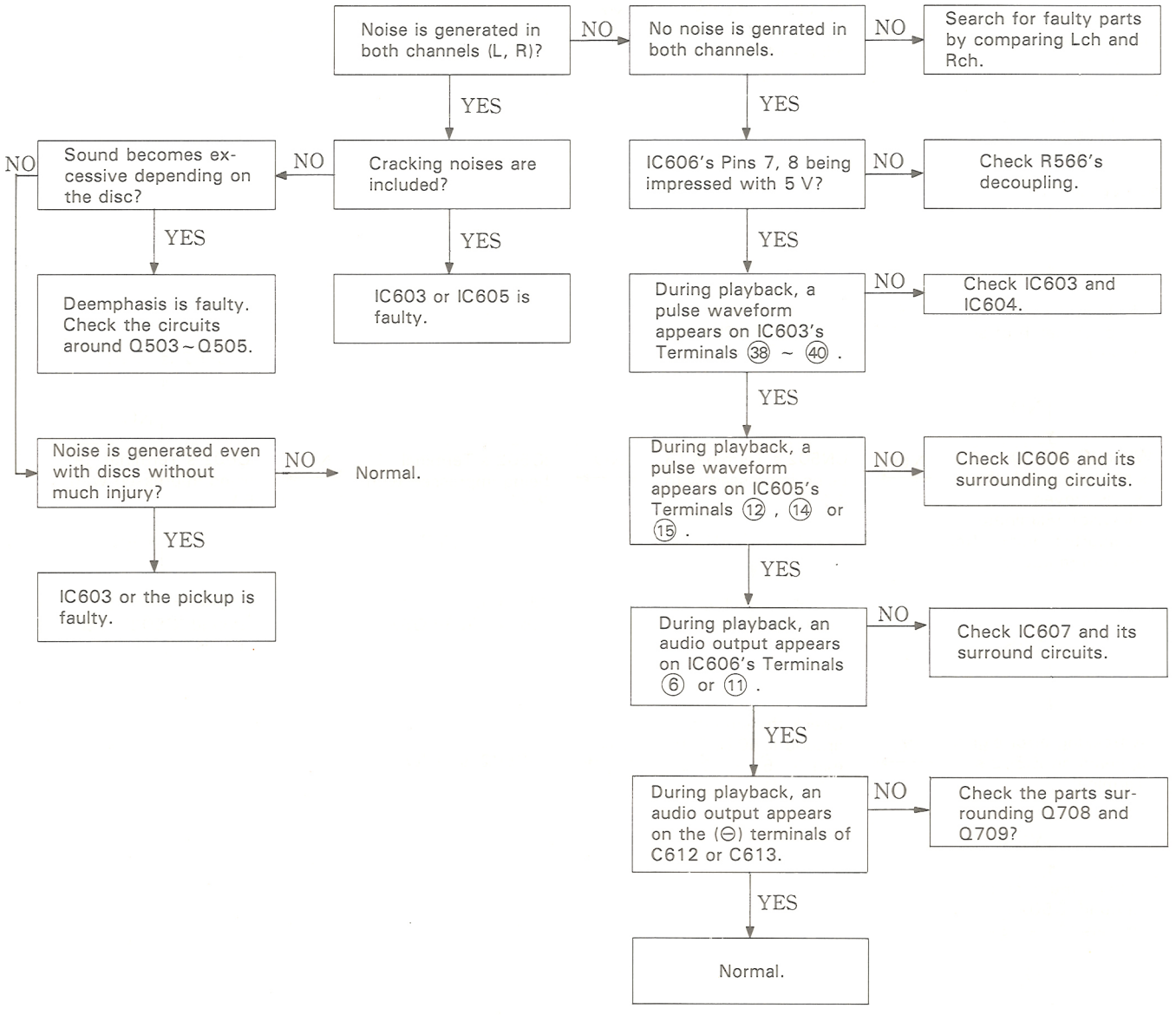

Fig. 8-13

■ Focus servo section

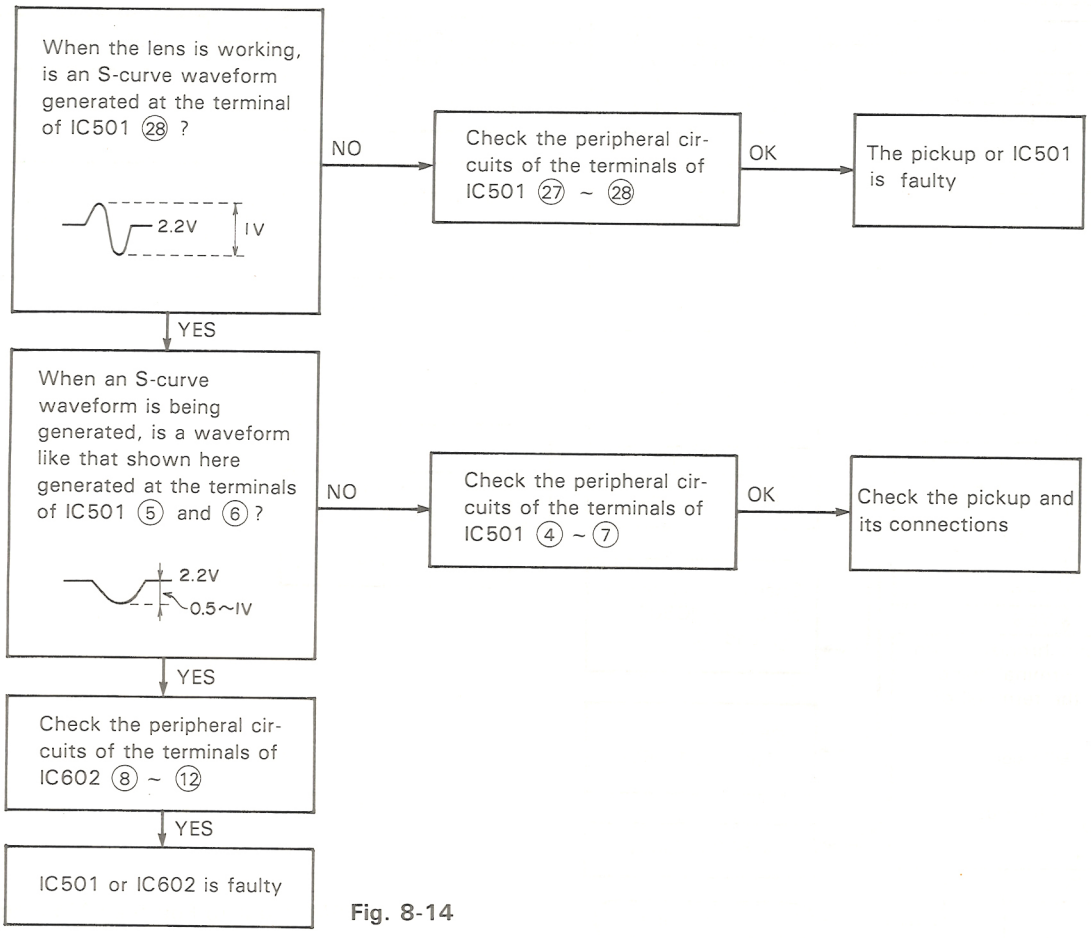

Fig. 8-14

■ Focus drive section

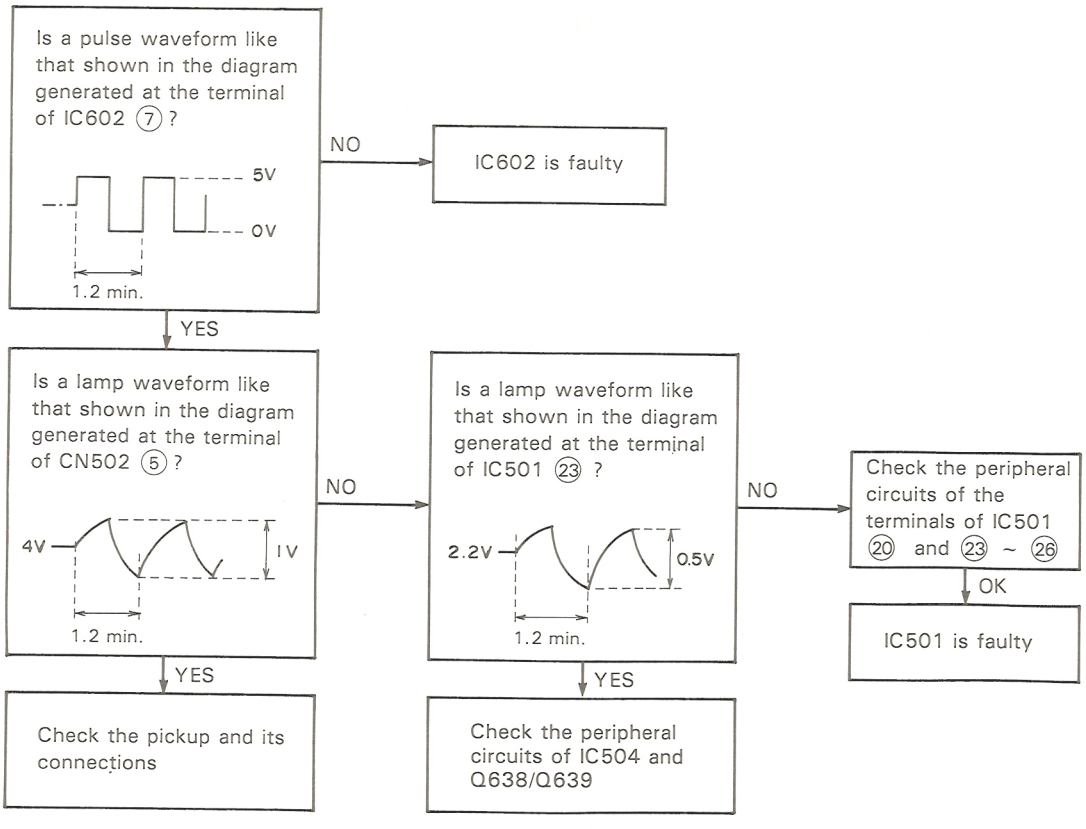

Fig. 8-15

■ Spindle section

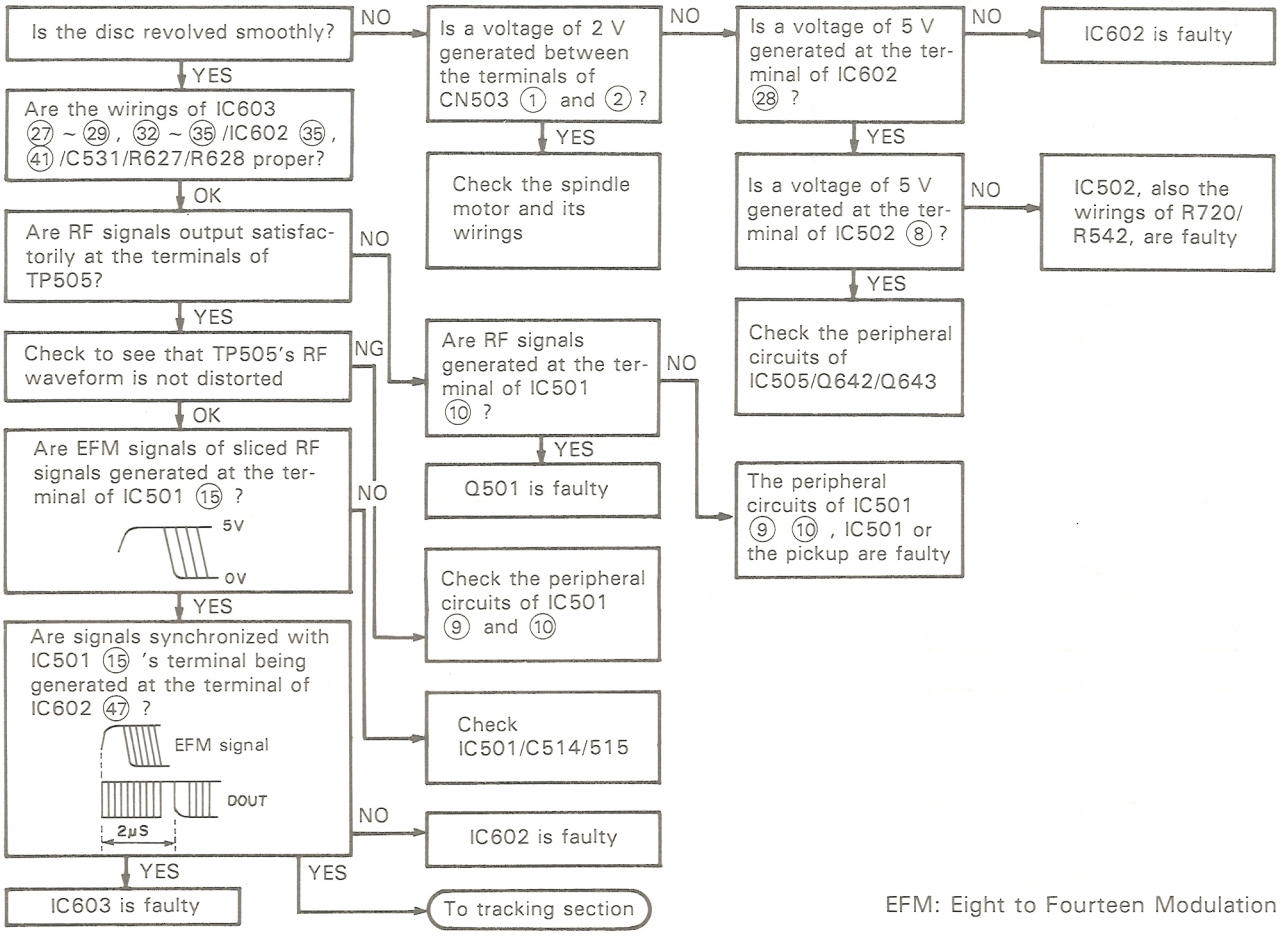

EFM: Eight to Fourteen Modulation

Fig. 8-16

■ Feed Section

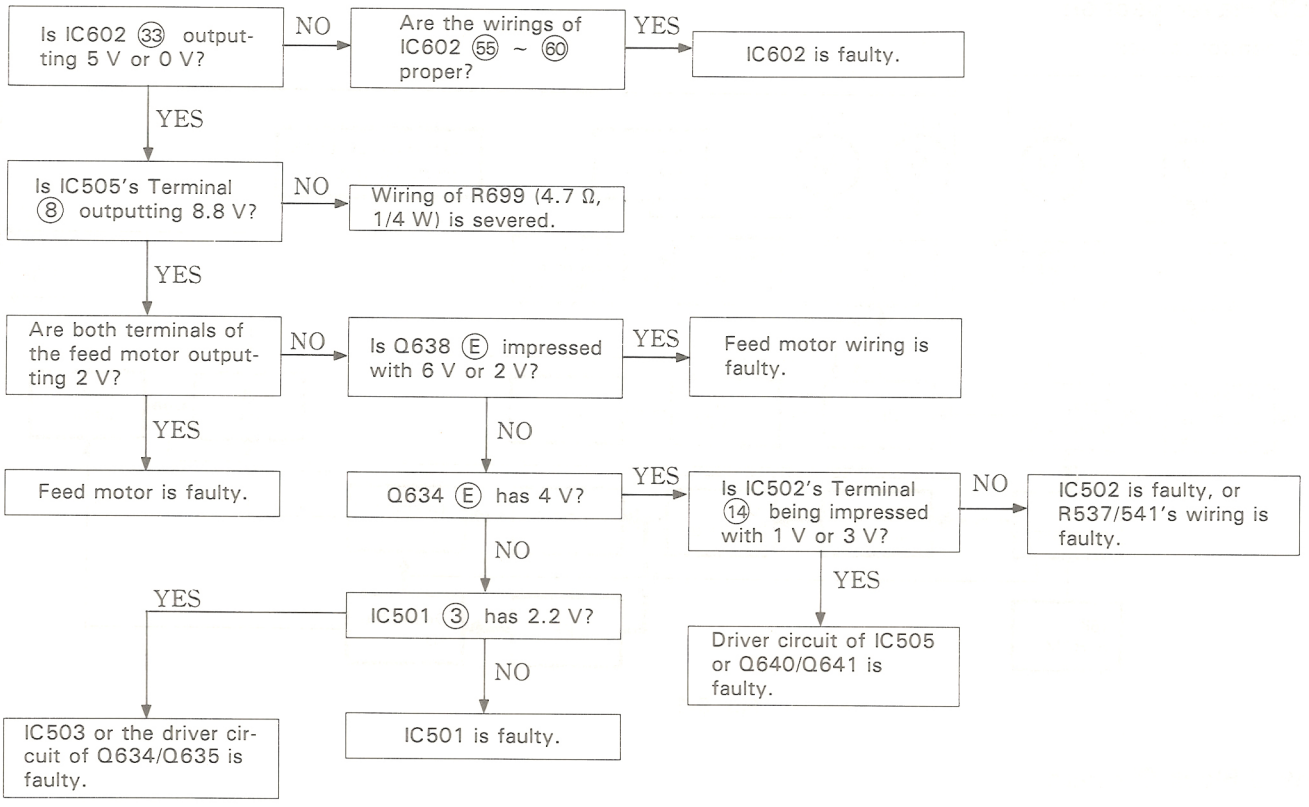

Fig. 8-17

9 Block Diagram

■ CD Player Section

• CD control section

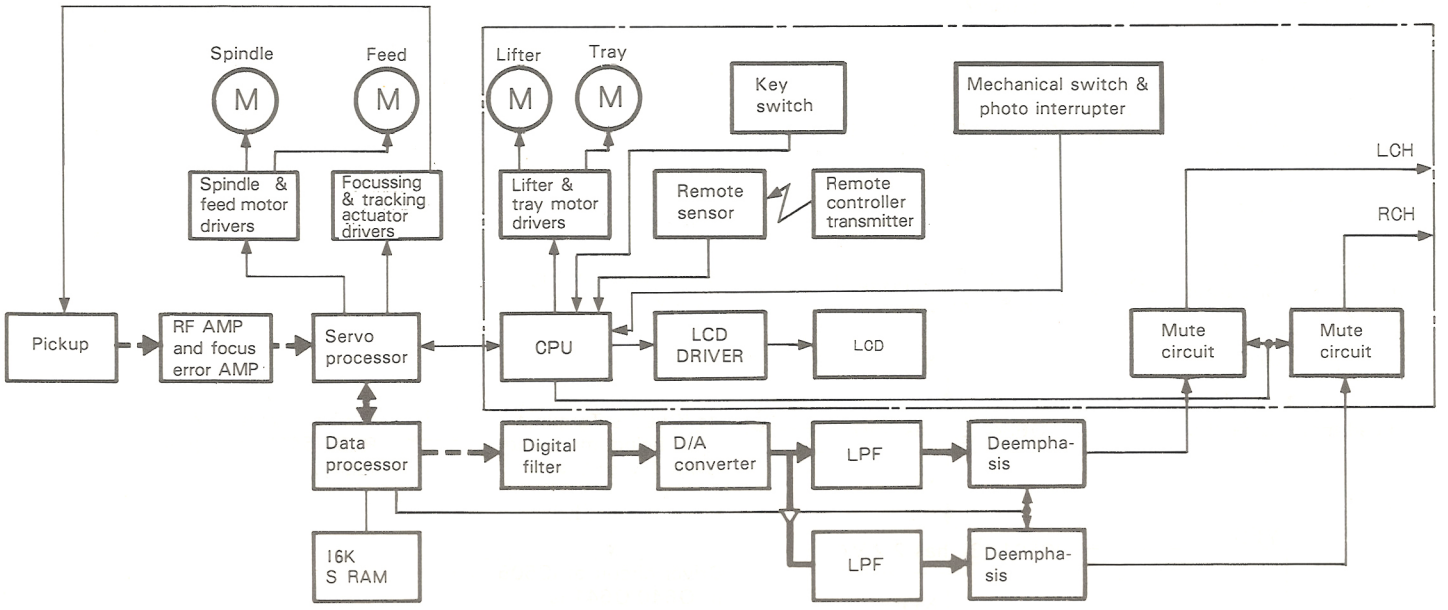

Fig. 9-1

CD Control Block Diagram

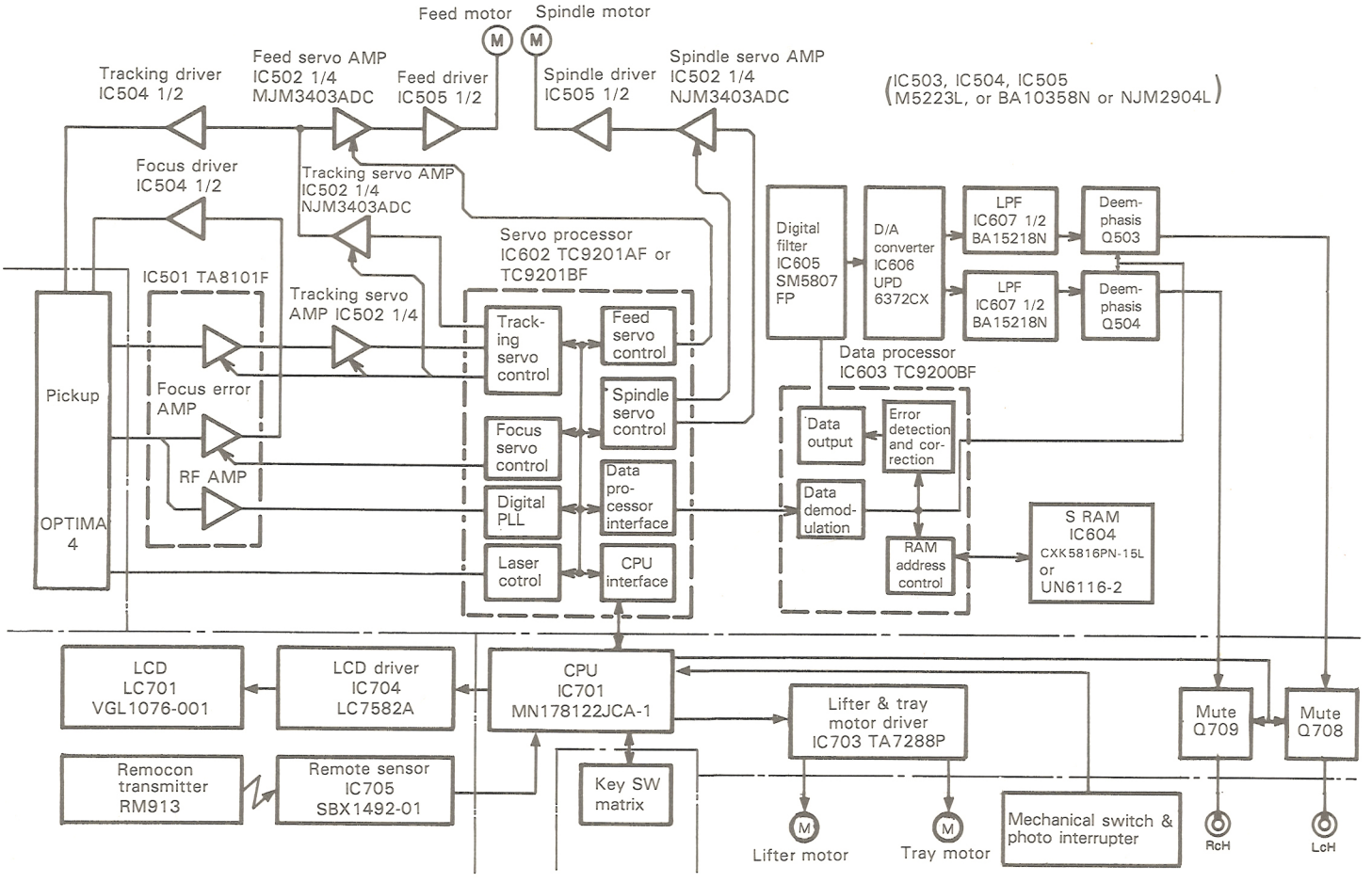

Fig. 9-2

■ Receiver Section

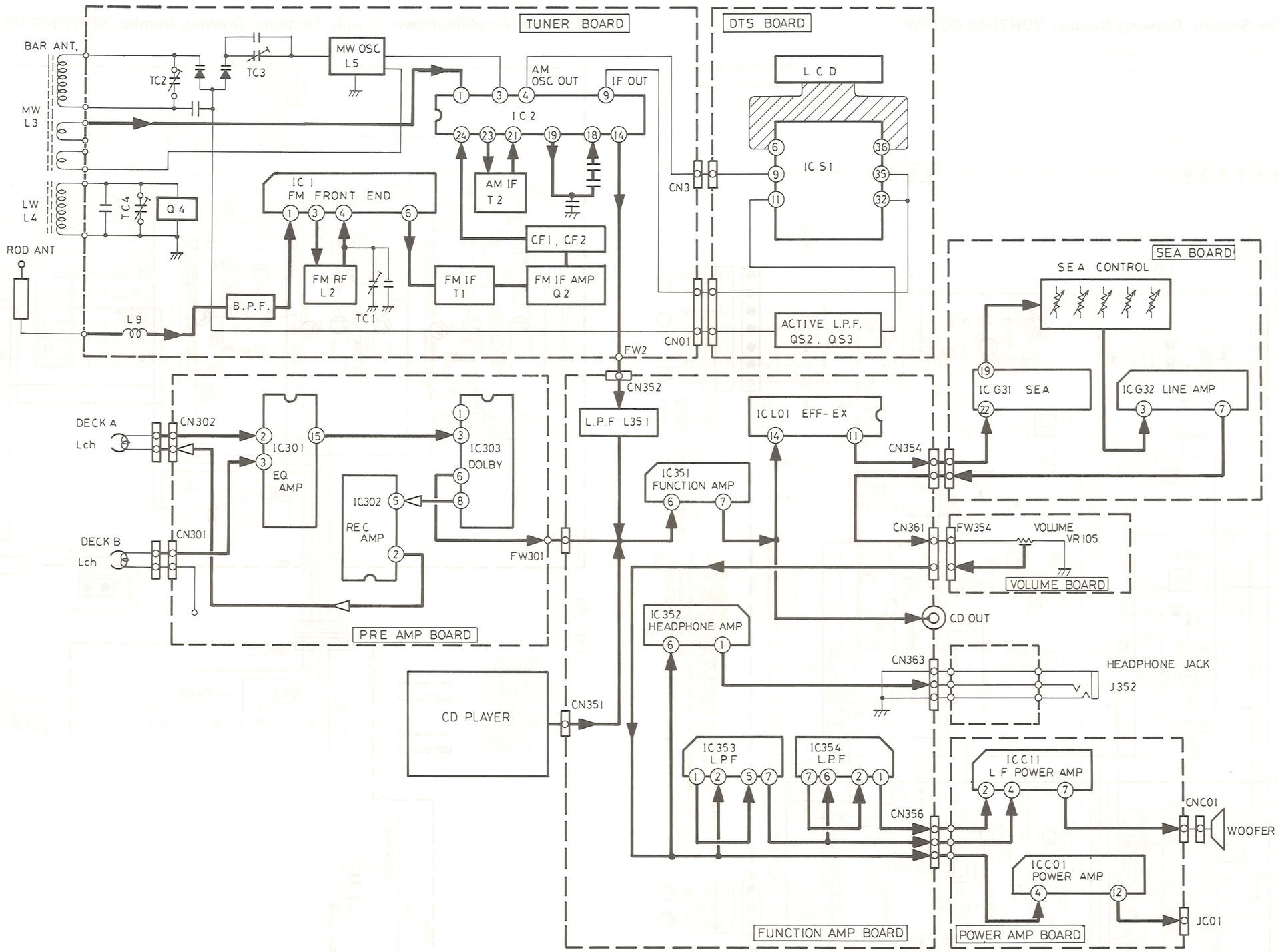

Fig. 9-3

10 Standard Schematic Diagram

■ Pre Amplifier Section: Drawing Number VDH7048-001PW

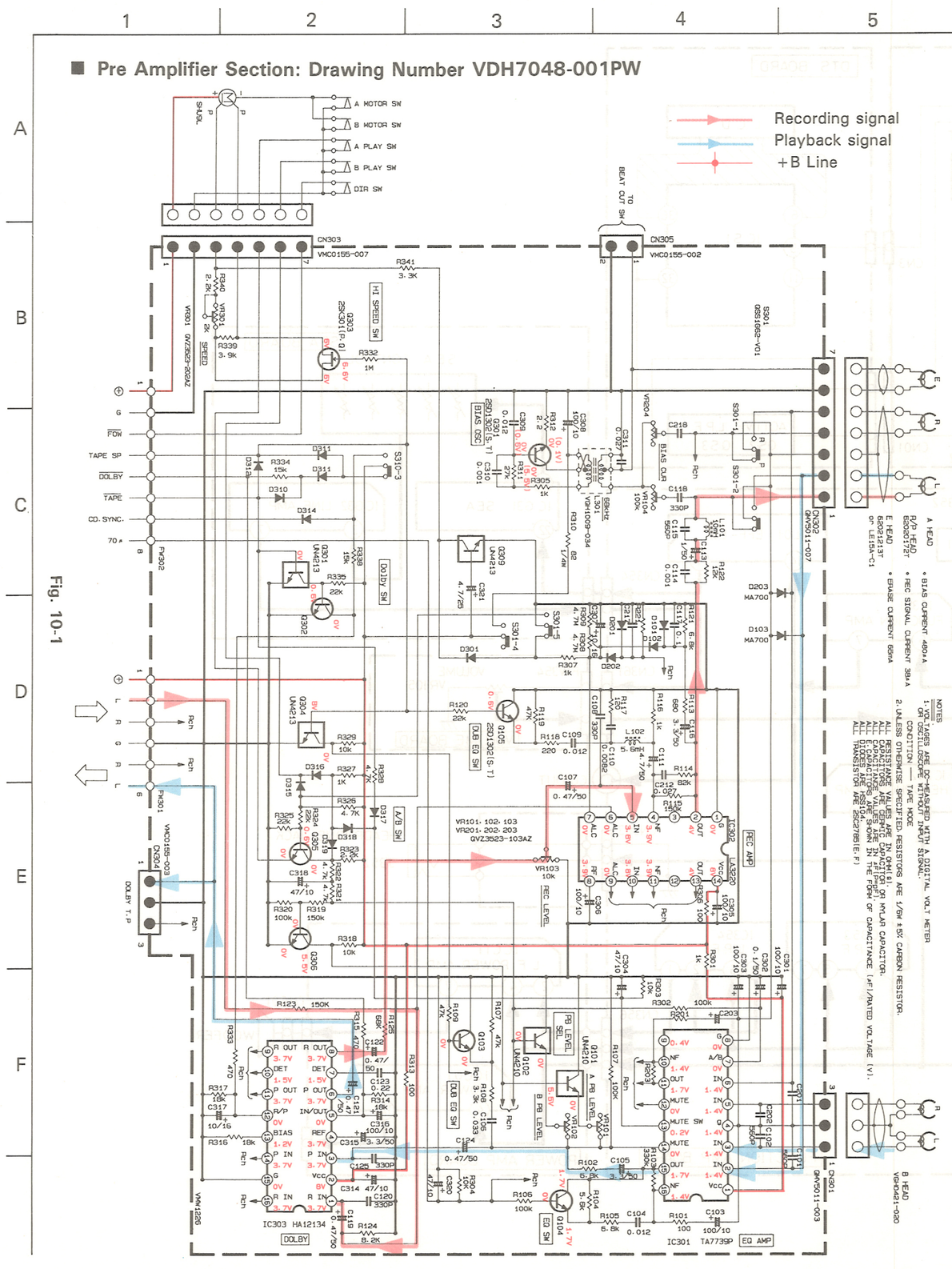

Fig. 10-1

■ Power Amplifier/Power Supply Sections: Drawing Number VDH7048-001AW

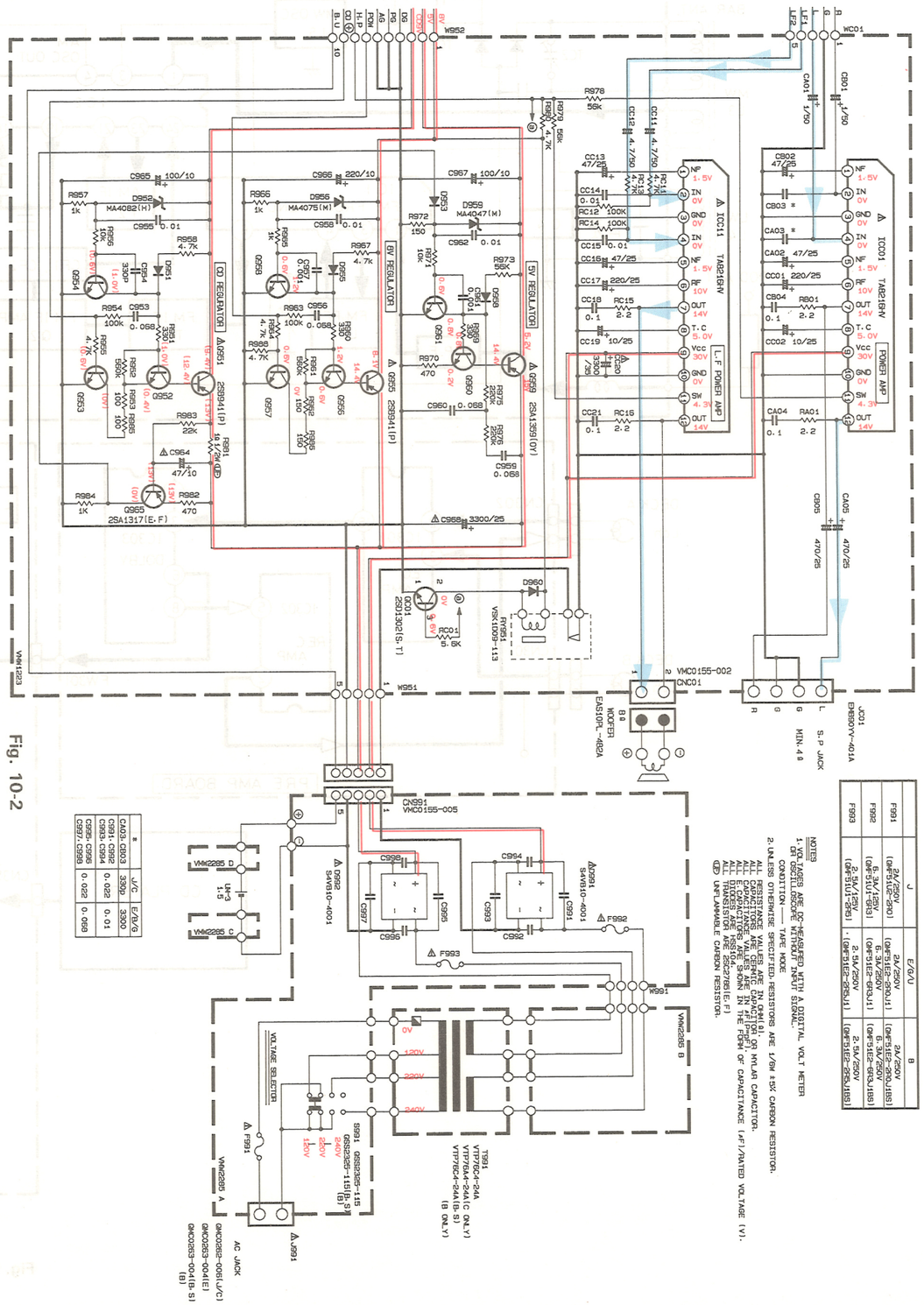

Fig. 10-2

■ Timer/Function/Other Section: Drawing Number VDH7048-002SV

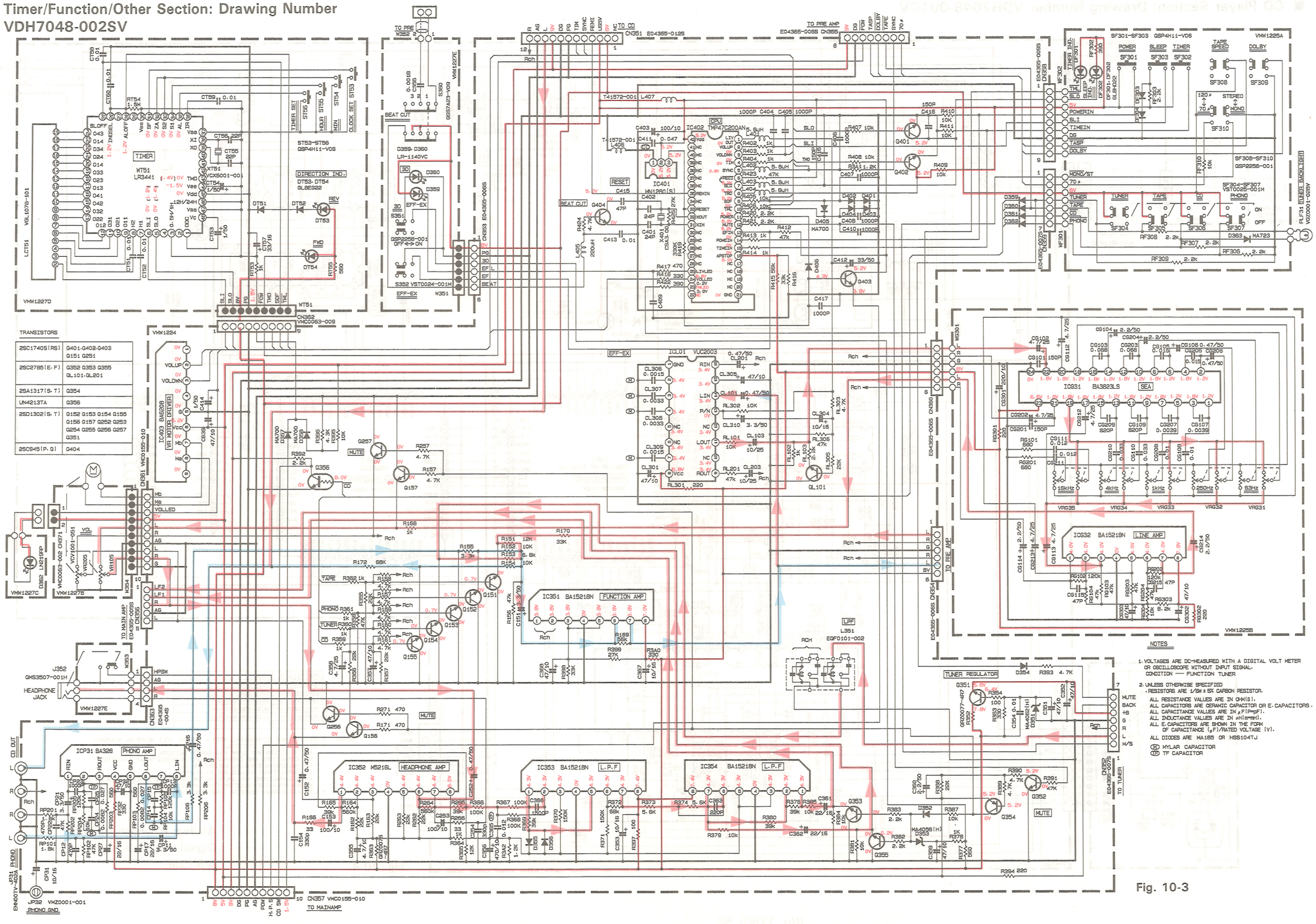

Fig. 10-3

■ CD Player Section: Drawing Number VDH7048-001CV

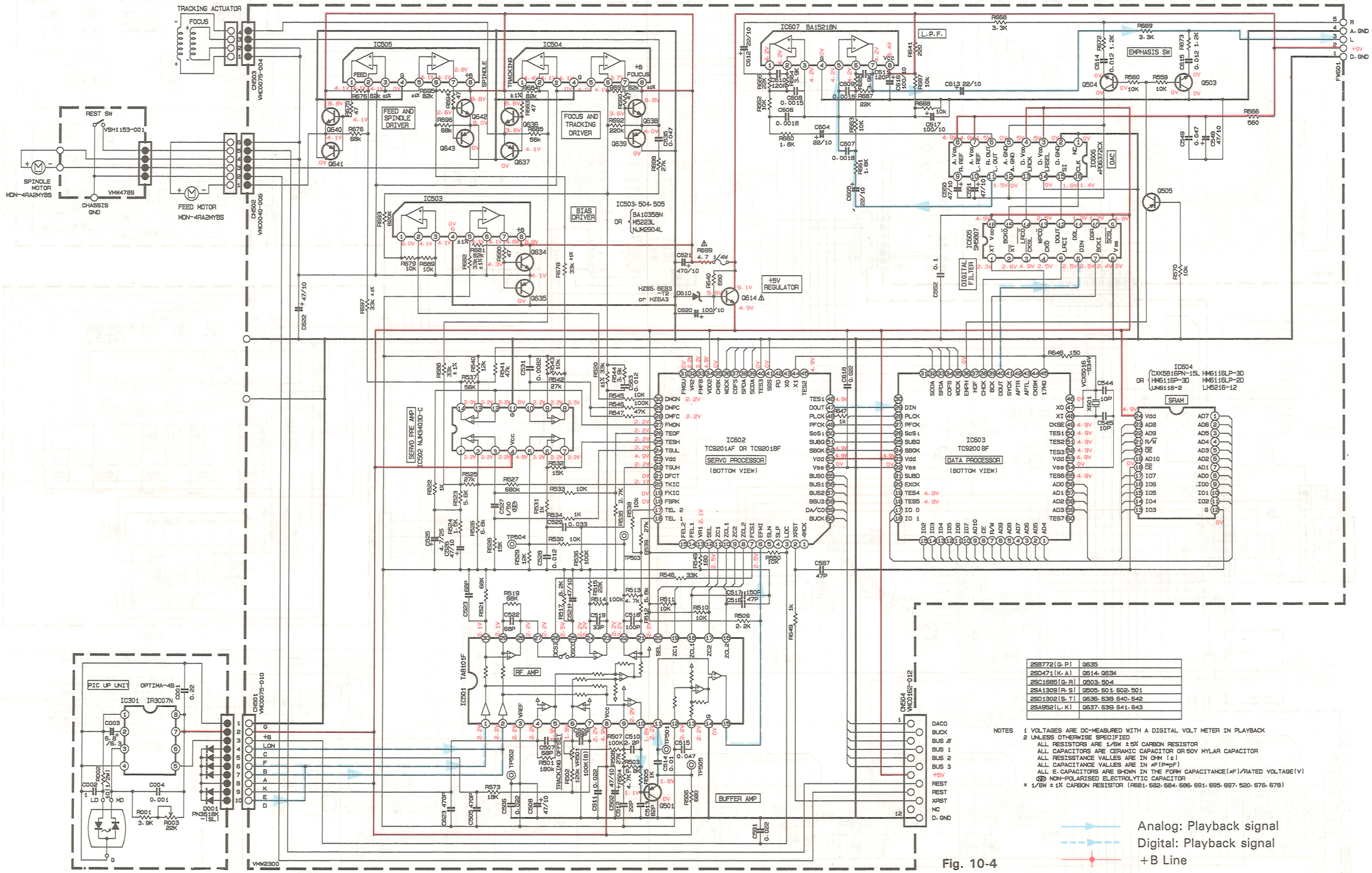

2SB772(Q,P)	Q635
2SD471(K,A)	Q614, Q634
2SC1685(Q,R)	Q503, 504
2SA1309(R,S)	Q505, 601, 602, 501
2SD1302(S,T)	Q636, 638, 640, 642
2SA952(L,K)	Q637, 639, 641, 643

NOTES
1 VOLTAGES ARE DC-MEASURED WITH A DIGITAL VOLT METER IN PLAYBACK
2 UNLESS OTHERWISE SPECIFIED
ALL RESISTORS ARE 1/6W ±5% CARBON RESISTOR
ALL CAPACITORS ARE CERAMIC CAPACITOR OR 50V MYLAR CAPACITOR
ALL RESISSTANCE VALLES ARE IN OHM (Ω)
ALL CAPACITANCE VALLES ARE IN ±F(P=pF)
ALL E. CAPACITORS ARE SHOWN IN THE FORM CAPACITANCE(±F)/RATED VOLTAGE(V)
NP NON-POLARISED ELECTROLYTIC CAPACITOR
* 1/6W ±1% CARBON RESISTOR (RS81, 682, 684, 686, 691, 695, 697, 520, 676, 678)

Analog: Playback signal
Digital: Playback signal
+B Line

Fig. 10-4

■ CD Changer Section: Drawing Number VDH7048-001DV

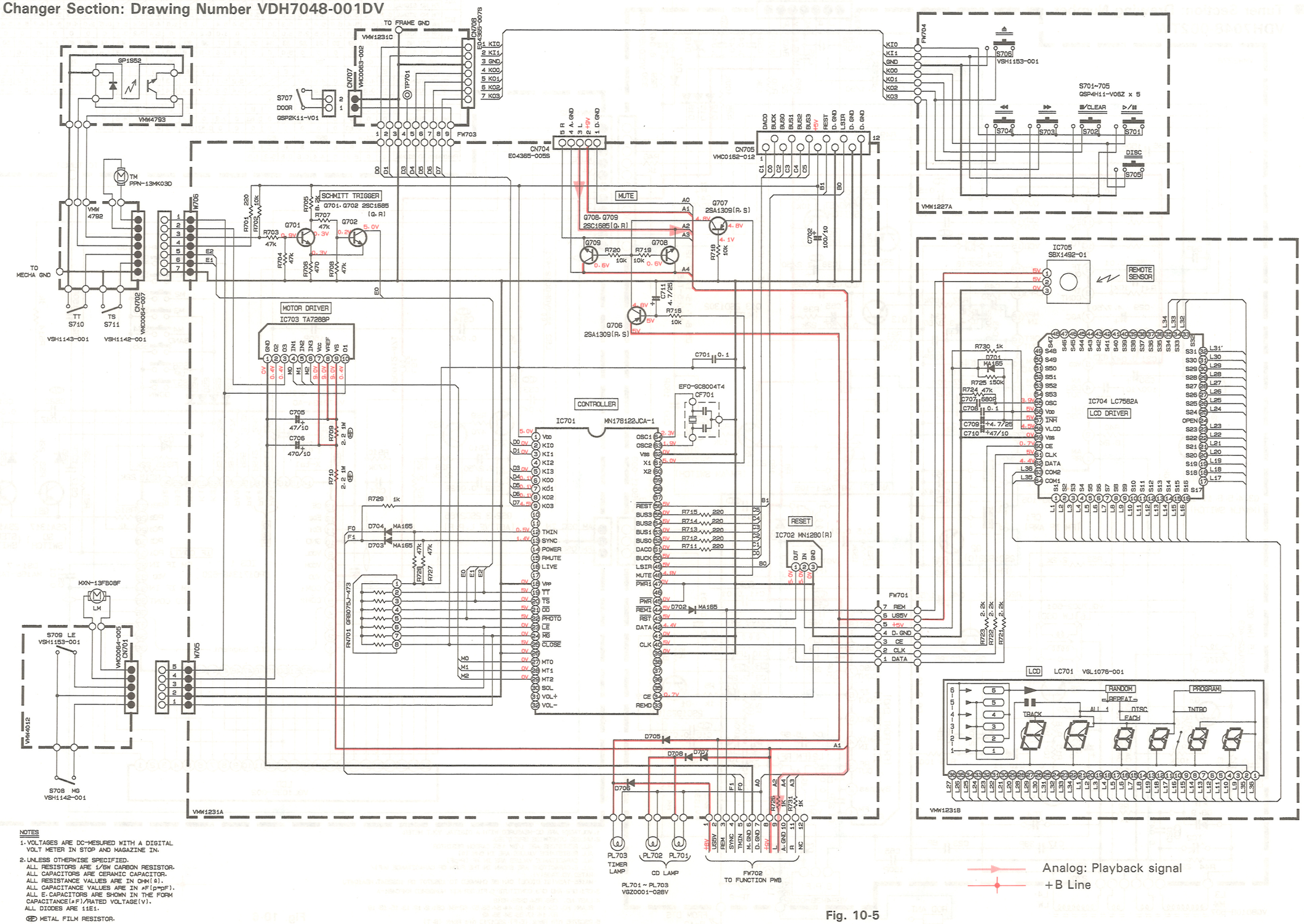

NOTES

1. VOLTAGES ARE DC-MESURED WITH A DIGITAL VOLT METER IN STOP AND MAGAZINE IN.
2. UNLESS OTHERWISE SPECIFIED.
   ALL RESISTORS ARE 1/6W CARBON RESISTOR.
   ALL CAPACITORS ARE CERAMIC CAPACITOR.
   ALL RESISTANCE VALUES ARE IN OHM(Ω).
   ALL CAPACITANCE VALUES ARE IN μF(p=pF).
   ALL E-CAPACITORS ARE SHOWN IN THE FORM CAPACITANCE(μF)/RATED VOLTAGE(V).
   ALL DIODES ARE 1SE1.

(MF) METAL FILM RESISTOR.

Fig. 10-5

■ Tuner Section: Drawing Number VDH7048-002TW

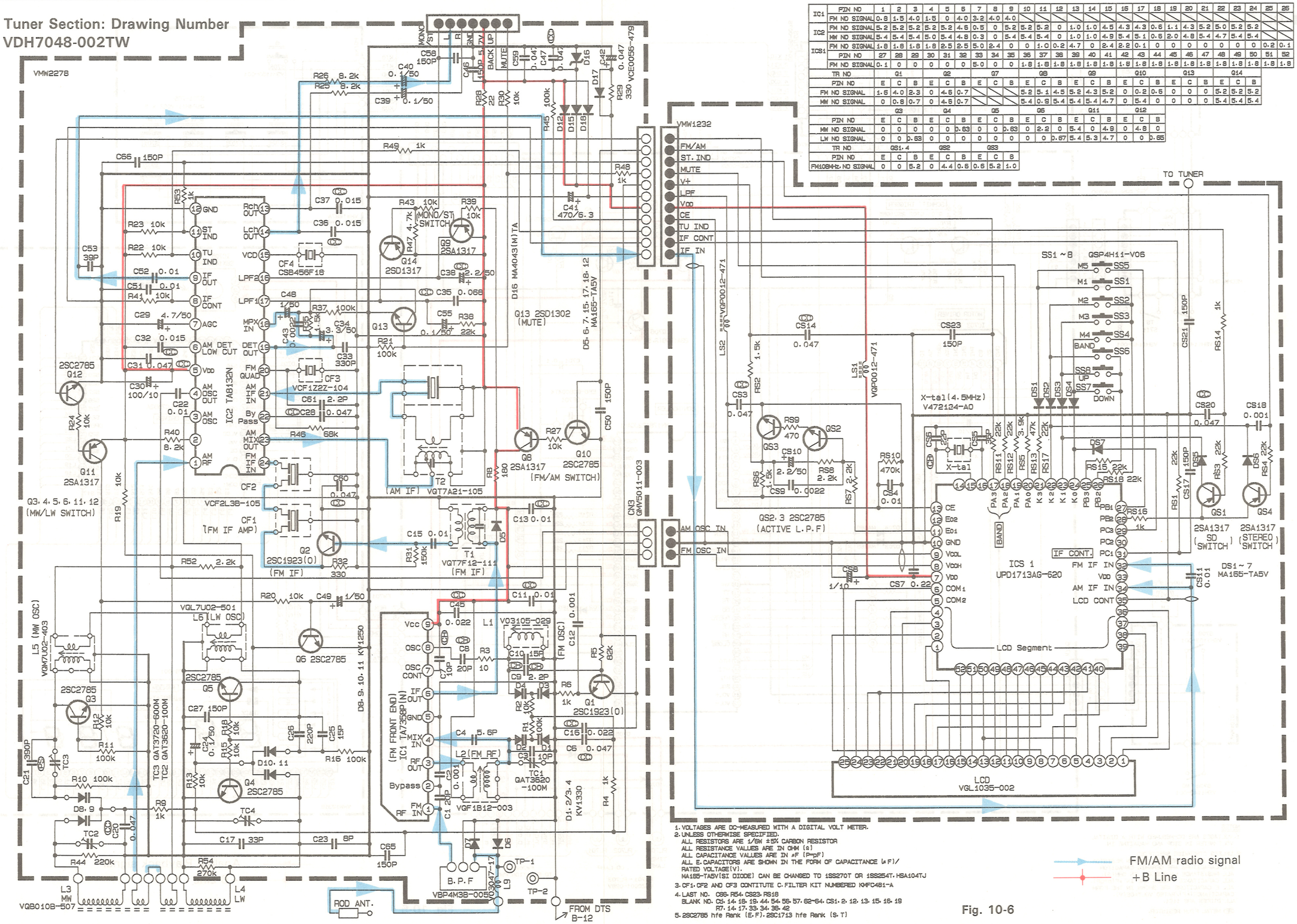

	PIN NO	1	2	3	4	5	6	7	8	9	10	11	12	13	14	15	16	17	18	19	20	21	22	23	24	25	26
IC1	FM NO SIGNAL	0.8	1.5	4.0	1.5	0	4.0	3.2	4.0	4.0																	
IC2	FM NO SIGNAL	5.2	5.2	5.2	5.2	5.2	4.6	0.5	0	5.2	5.2	5.2	0	1.0	1.0	4.5	4.3	4.3	0.6	1.1	4.3	5.2	5.0	5.2	5.2		
	MW NO SIGNAL	5.4	5.4	5.4	5.0	5.4	4.8	0.3	0	5.4	5.4	5.4	0	1.0	1.0	4.9	5.4	5.1	0.5	2.0	4.8	5.4	4.7	5.4	5.4		
ICS1	FM NO SIGNAL	1.8	1.8	1.8	1.8	2.5	2.5	5.0	2.4	0	0	1.0	0.2	4.7	0	2.4	2.2	0.1	0	0	0	0	0	0	0	0.2	0.1
	PIN NO	27	28	29	30	31	32	33	34	35	36	37	38	39	40	41	42	43	44	45	46	47	48	49	50	51	52
	FM NO SIGNAL	0.1	0	0	0	0	0	5.0	0	0	1.8	1.8	1.8	1.8	1.8	1.8	1.8	1.8	1.8	1.8	1.8	1.8	1.8	1.8	1.8	1.8	1.8

TR NO	Q1			Q2			Q7			Q8			Q9			Q10			Q13			Q14		
PIN NO	E	C	B	E	C	B	E	C	B	E	C	B	E	C	B	E	C	B	E	C	B	E	C	B
FM NO SIGNAL	1.6	4.0	2.3	0	4.6	0.7				5.2	5.1	4.5	5.2	4.3	5.2	0	0.2	0.6	0	0	0	5.2	5.2	5.2
MW NO SIGNAL	0	0.8	0.7	0	4.6	0.7				5.4	0.9	5.4	5.4	5.4	4.7	0	5.4	0	0	0	0	5.4	5.4	5.4

	Q3			Q4			Q5			Q6			Q11			Q12		
PIN NO	E	C	B	E	C	B	E	C	B	E	C	B	E	C	B	E	C	B
MW NO SIGNAL	0	0	0	0	0	0.63	0	0	0.63	0	2.2	0	5.4	0	4.9	0	4.8	0
LW NO SIGNAL	0	0	0.63	0	0	0	0	0	0	0	0	0.67	5.4	5.3	4.7	0	0	0.65

TR NO	GS1.4			GS2			GS3		
PIN NO	E	C	B	E	C	B	E	C	B
FM108MHz NO SIGNAL	0	0	5.2	0	4.4	0.6	0.6	5.2	1.0

1. VOLTAGES ARE DC-MEASURED WITH A DIGITAL VOLT METER.
2. UNLESS OTHERWISE SPECIFIED.
   ALL RESISTORS ARE 1/6W ±5% CARBON RESISTOR
   ALL RESISTANCE VALUES ARE IN OHM (Ω)
   ALL CAPACITANCE VALUES ARE IN μF (P=pF)
   ALL E.CAPACITORS ARE SHOWN IN THE FORM OF CAPACITANCE (μF)/ RATED VOLTAGE(V).
   MA165-TA5V(SI DIODE) CAN BE CHANGED TO 1SS270T OR 1SS254T. HSA104TJ
3. CF1, CF2 AND CF3 CONTITUTE C.FILTER KIT NUMBERED KHFC481-A
4. LAST NO. C56, R54, C523, RS18
   BLANK NO. CS: 14, 15, 19, 44, 54, 55, 57, 62~64, CS1, 2, 12, 13, 15, 16, 19
   R7, 14, 17, 33, 34, 36, 42
5. 2SC2785 hfe Rank (E,F), 2SC1713 hfe Rank (S,T)

FM/AM radio signal
+B Line

Fig. 10-6

11 Wiring Connections (1)

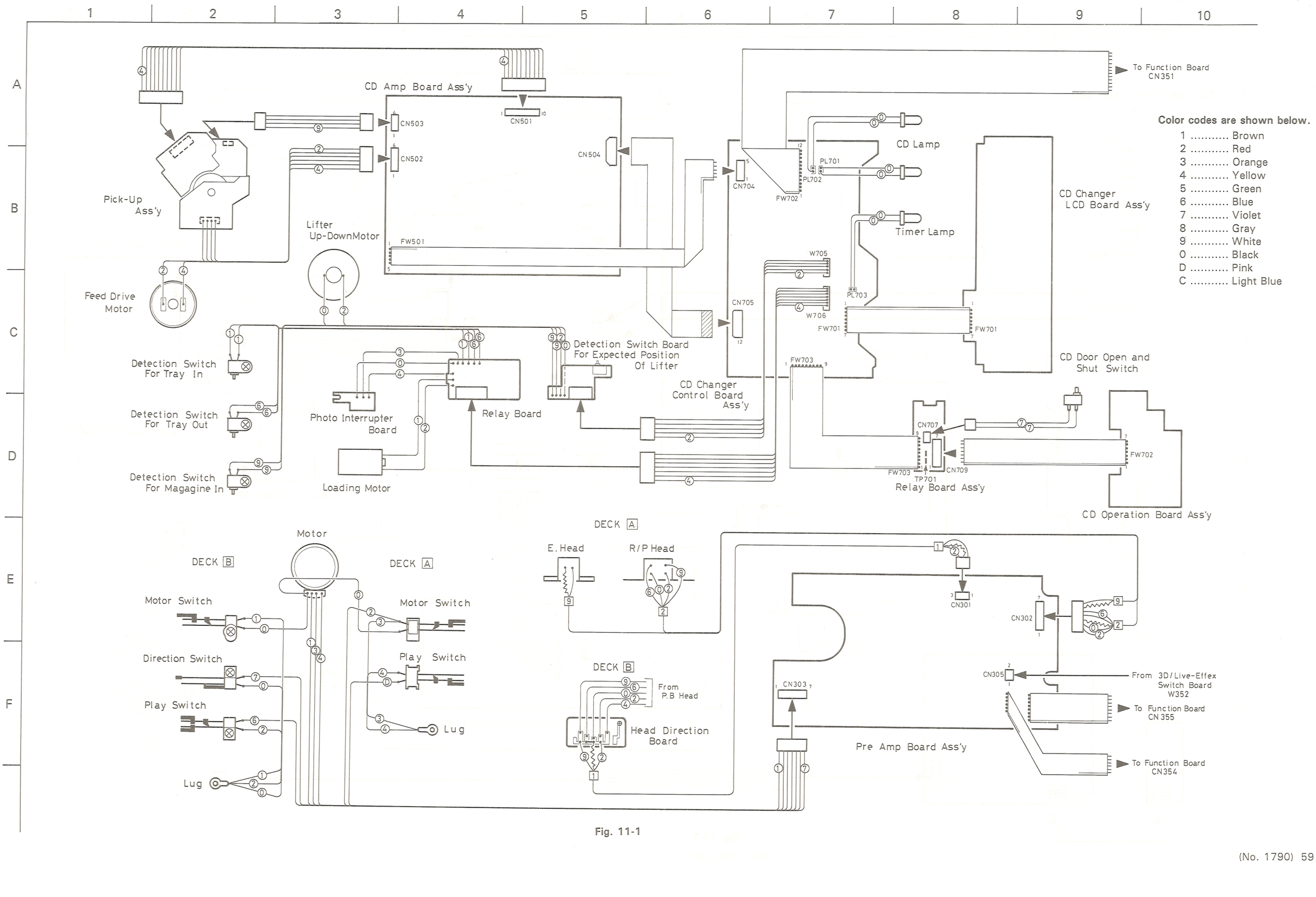

Fig. 11-1

Wiring Connections (2)

Color codes are shown below.

1 ..... Brown
2 ..... Red
3 ..... Orange
4 ..... Yellow
5 ..... Green
6 ..... Blue
7 ..... Violet
8 ..... Gray
9 ..... White
0 ..... Black
D ..... Pink
C ..... Light Blue

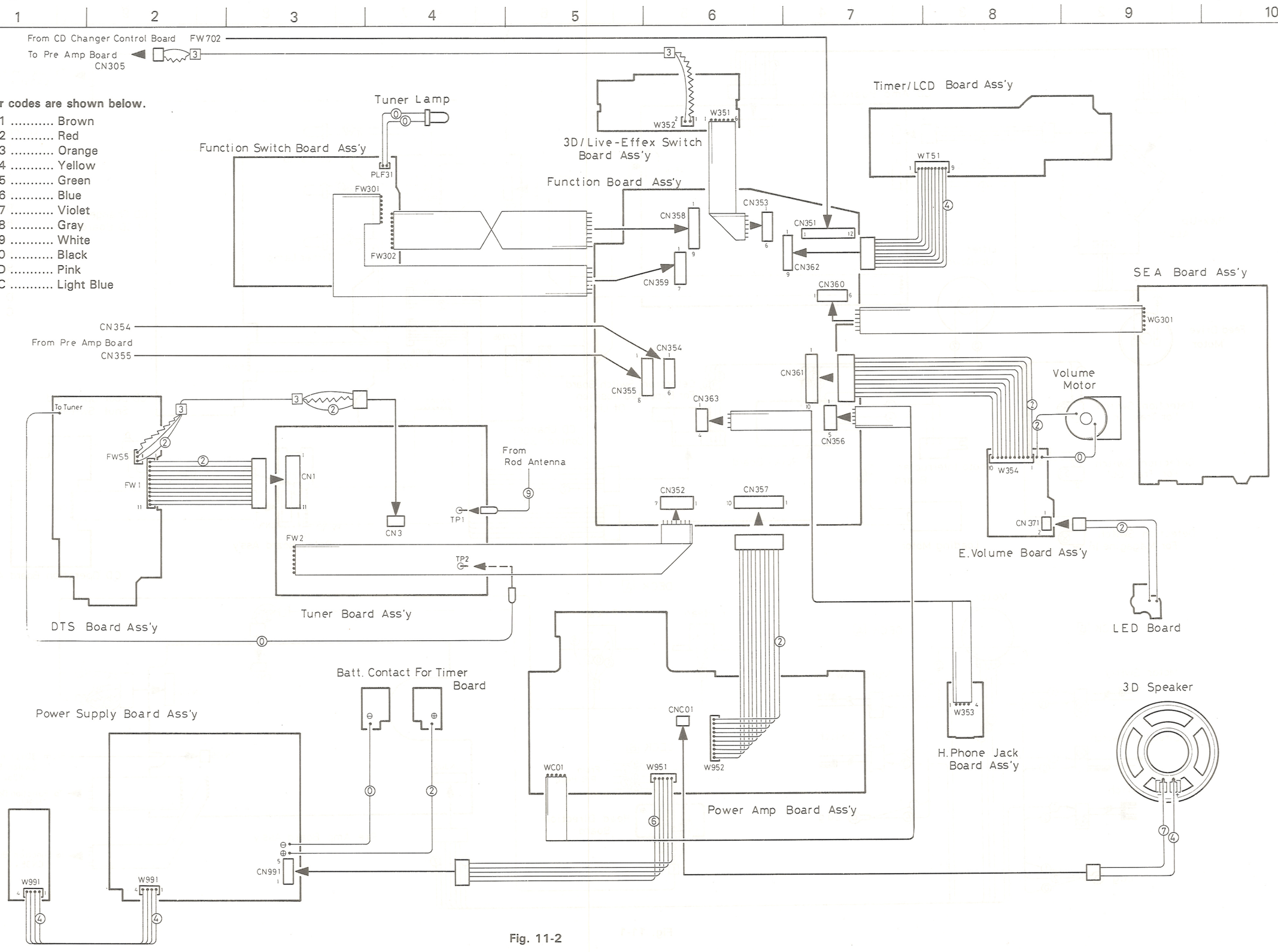

Fig. 11-2

12 Location of P.C. Board Parts

1 2 3 4 5 6 7 8 9 10

A B C D E F

■ Function Board: Drawing Number VMW1224

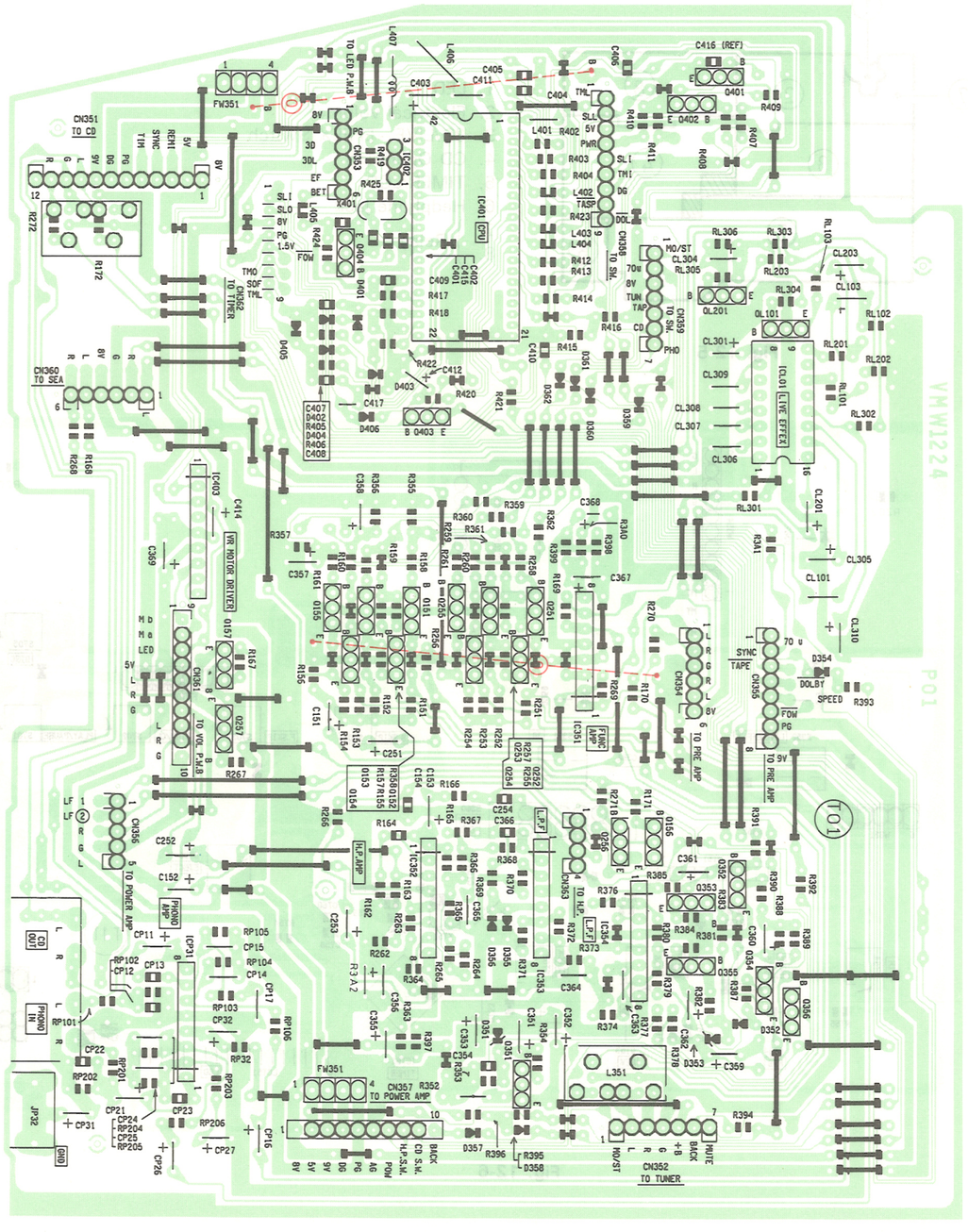

Fig. 12-1

■ SEA Board: Drawing Number VMW1225B

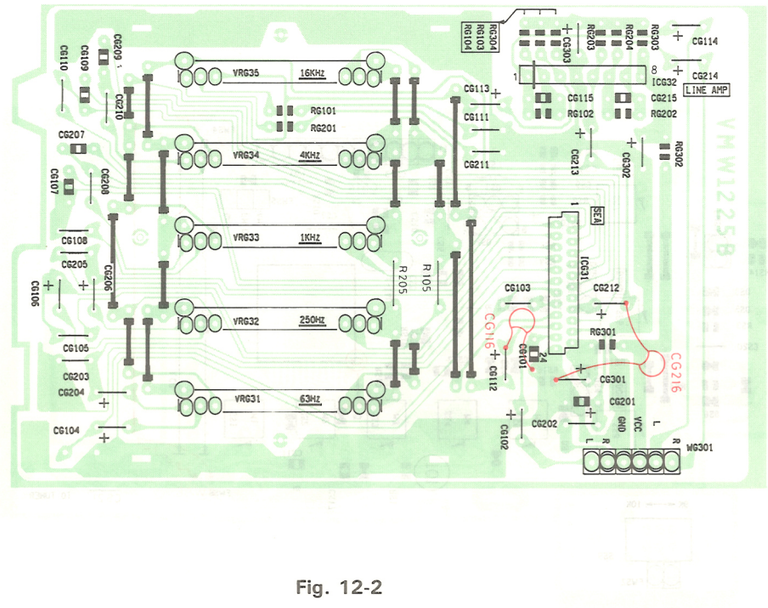

Fig. 12-2

■ Function Switch Board: Drawing Number VMW1225A

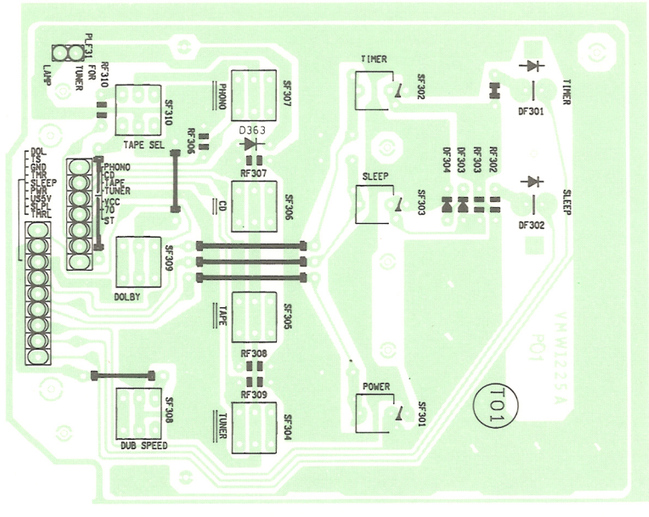

Fig. 12-3

■ DTS (Digital Tuning System) Board: Drawing Number VMW1232 PC-X1000 E

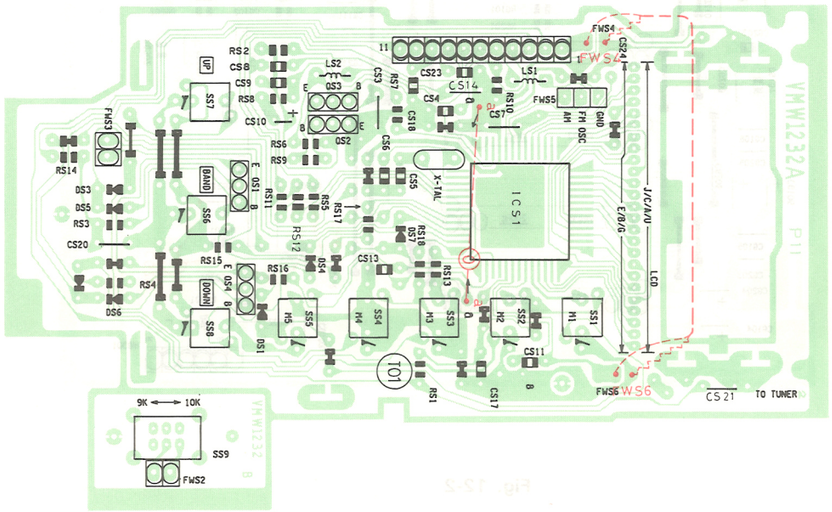

Fig. 12-4

■ VMW1227 Board: Drawing Number Breakdown PC-X1000E

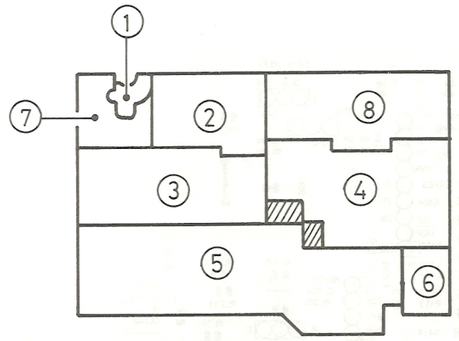

1. LED
2. Electrical volume
3. 3D/LIVE—EFFEX Switch
4. CD Operation
5. TIMER/LCD
6. Hedphone jack
7. } Relay
8. }

Fig. 12-5

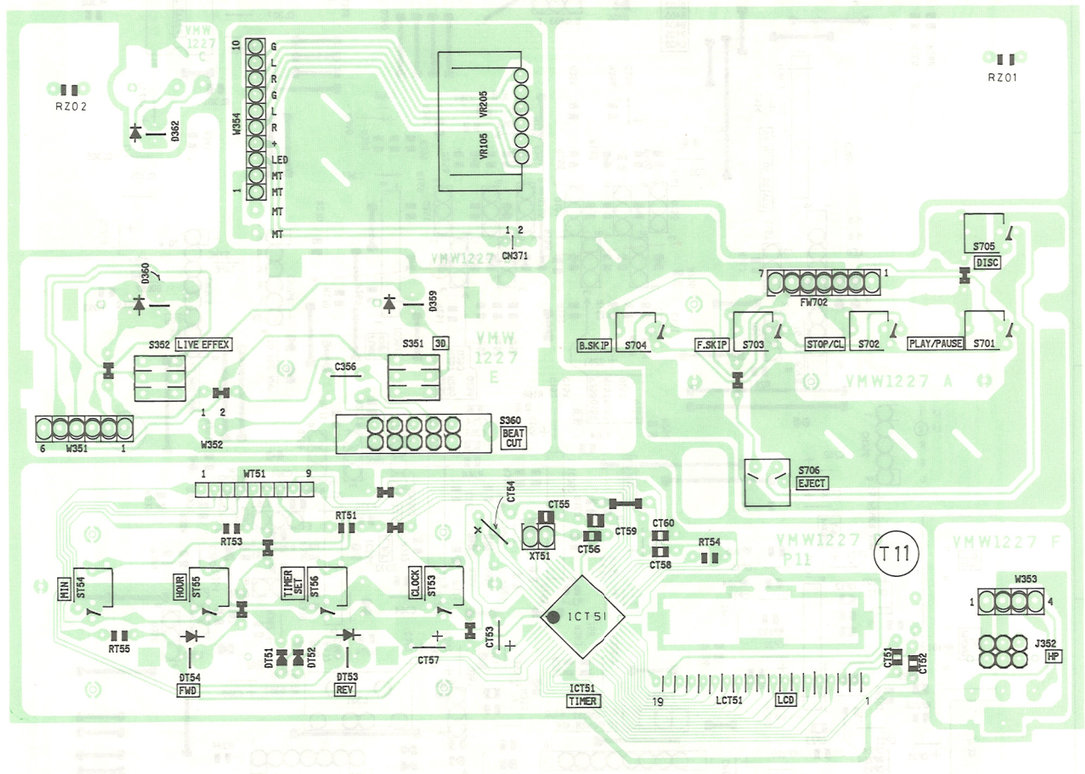

Fig. 12-6

■ Pre-Amplifier Board: Drawing Number VMW1226 PC-X1000E

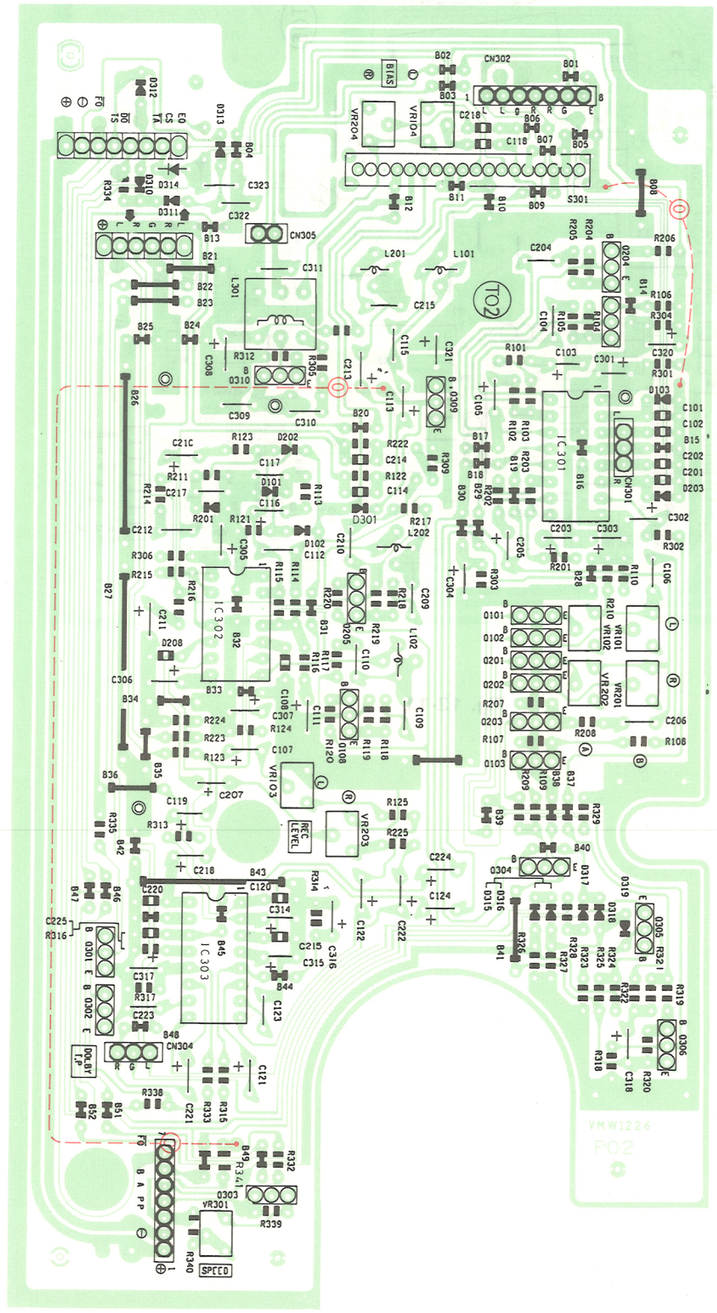

Fig. 12-7

■ Power Supply Board: Drawing Number VMW1285 Breakdown

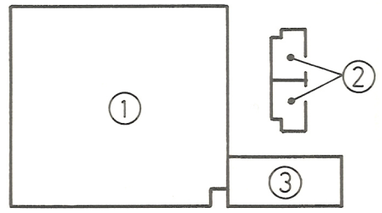

1. Power supply
2. Battery contact
3. Power trans.

Fig. 12-8

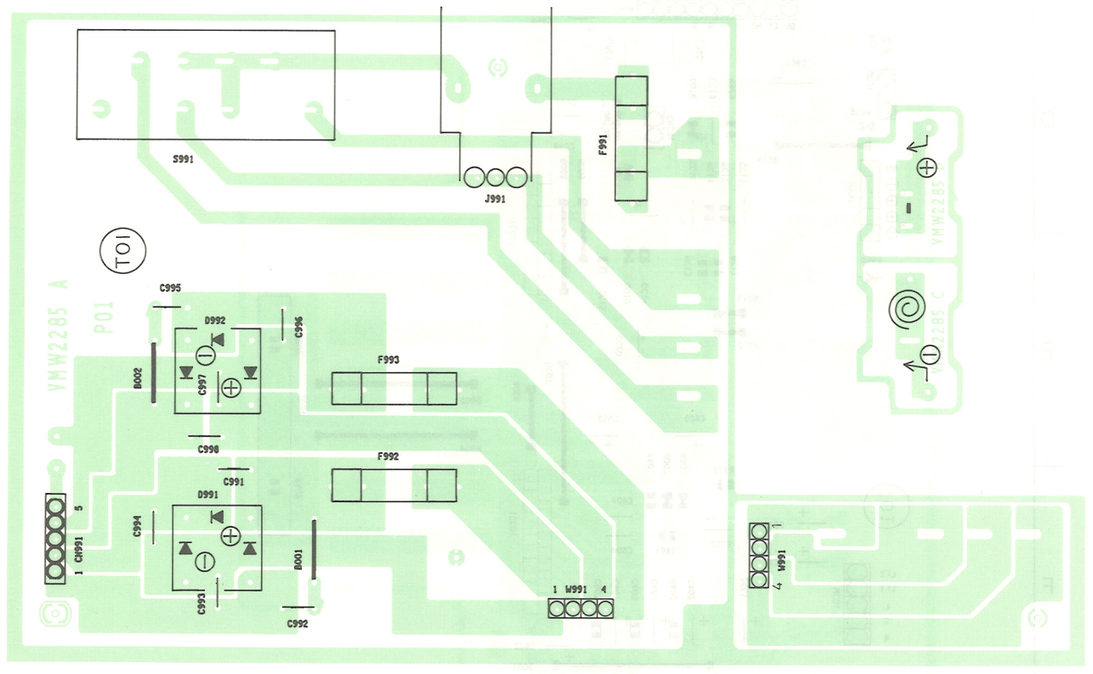

Fig. 12-9

■ Power Amplifier Board: Drawing Number VMW1223

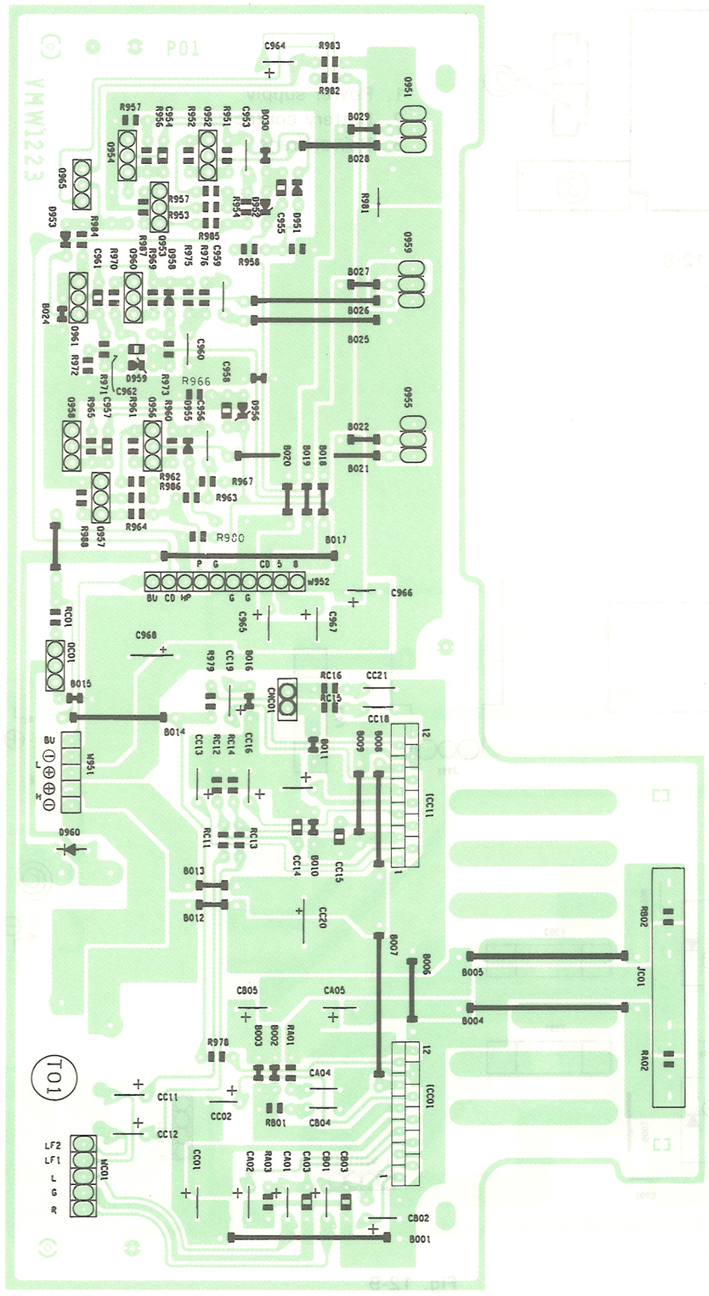

Fig. 12-10

■ Tuner Board: Drawing Number VMW2278

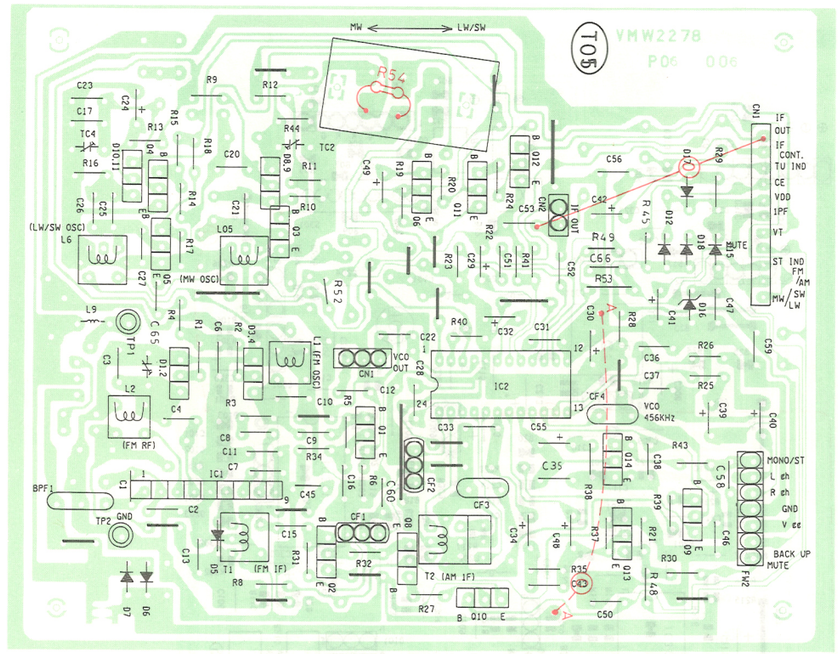

Fig. 12-11

■ CD Changer/LCD Board: Drawing Number WMW1231 Breakdown PC-X1000 E

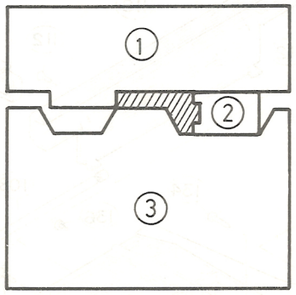

1. CD Changer LCD
2. Relay
3. CD Changer control

Fig. 12-12

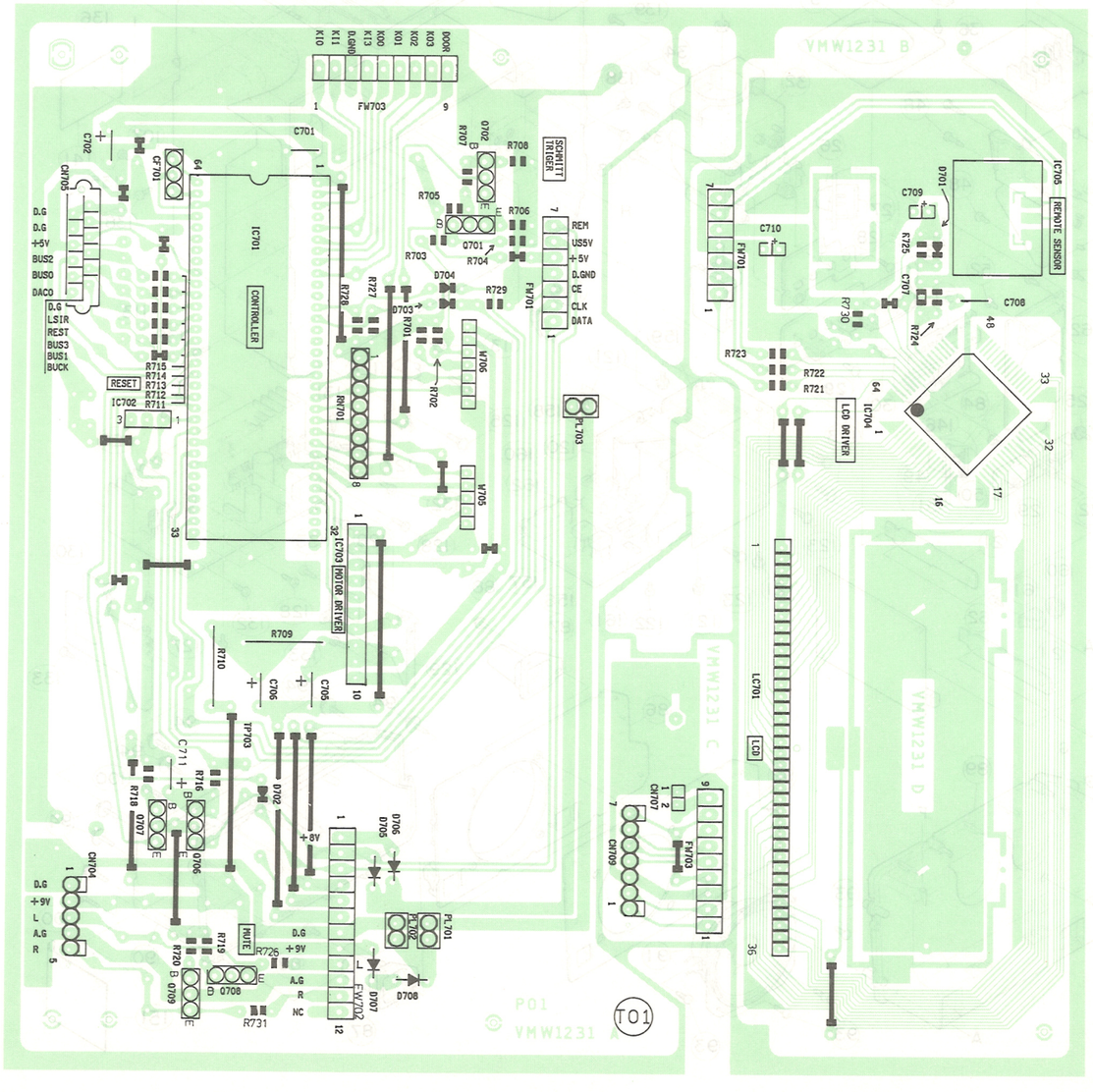

Fig. 12-13

■ CD Amplifier Board: Drawing Number VMW2300 PC-X1000E

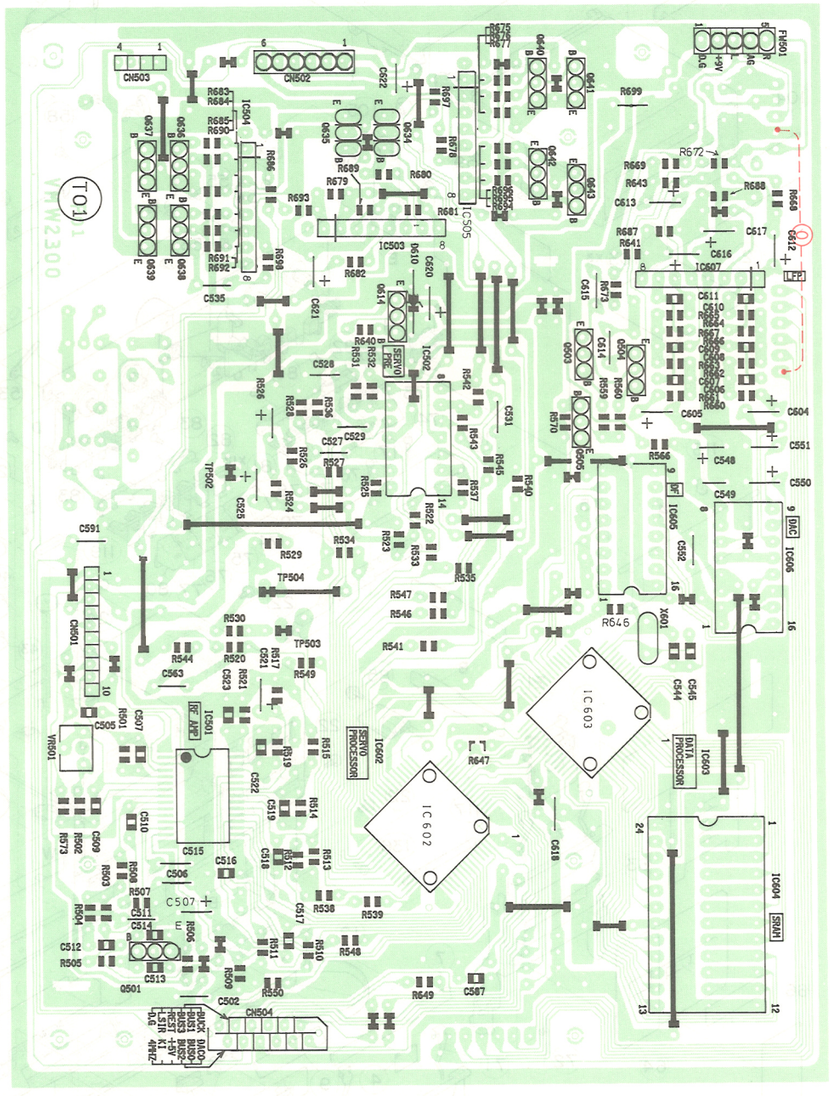

Fig. 12-14

13 Exploded View of Enclosure Component Parts

■ **Receiver Section**

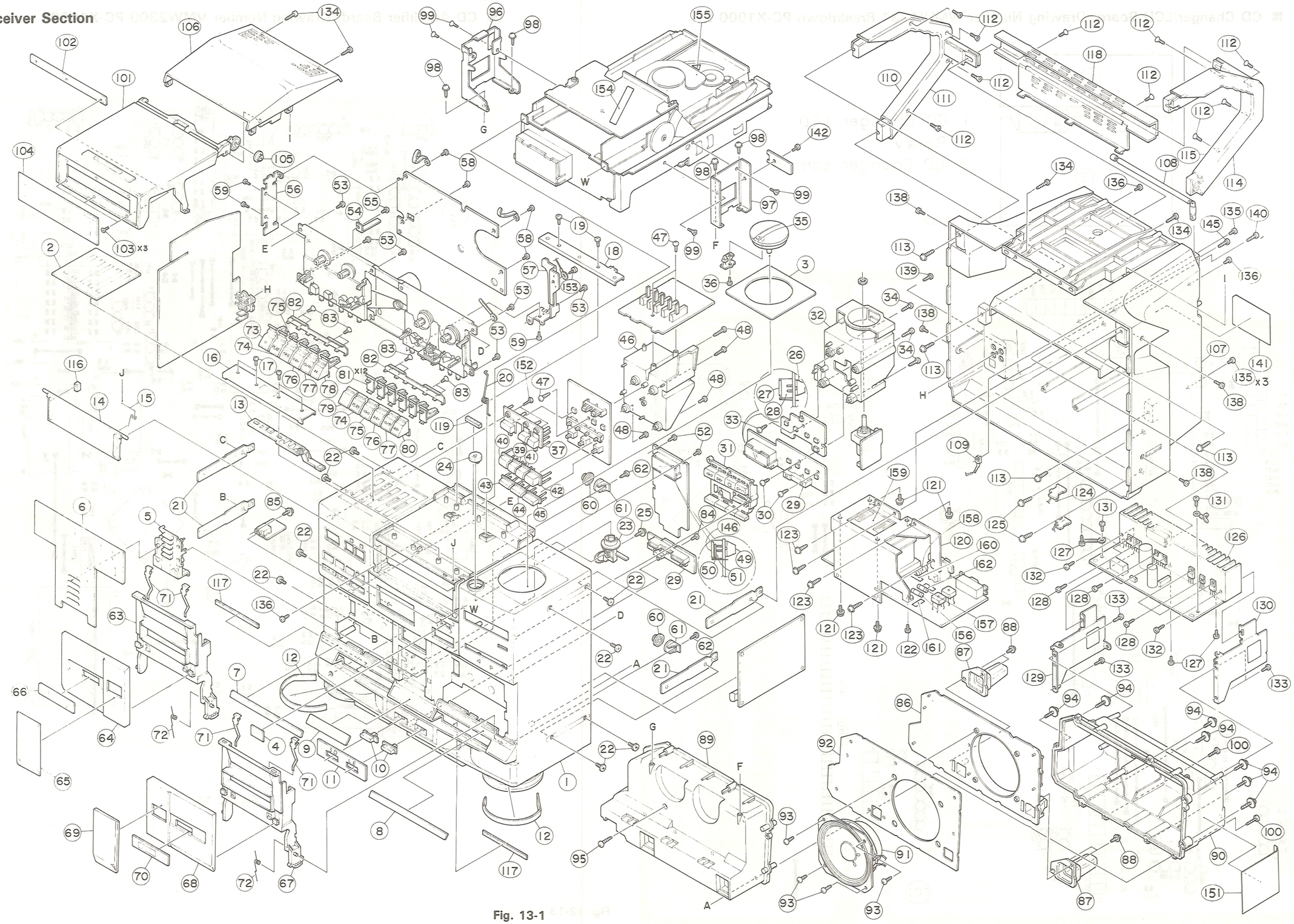

Fig. 13-1

(No. 1790) 66

■ Enclosure Component Parts List

⚠	REF.	PARTS NO.	PARTS NAME	REMARKS	QTY
	1~4,6~9, 11~17,23,116	ZCPRX1000E-FBK	FRONT CABINET ASS'Y		1
		ZCPRX1000B-FBK	FRONT CABINET ASS'Y		1
	63,71	ZCPRX1000K-CH-A	CASSETTE HOLDER ASS'Y		1
	67,71	ZCPRX1000K-CH-B	〃		1
	64,65,66	ZCPRX1000K-CL-A	CASSETTE LID ASS'Y		1
	68,69,70	ZCPRX1000K-CL-B	〃		1
	1	VJC1895-002	FRONT CABINET		1
	2	VJD3832-001	SEA PLATE		1
	3	VJD3833-001	VOLUME PLATE		1
	4	VYTT489-001	FILTER		1
	5	VXP3371-001	TUNER BUTTON		1
	6	VJD3834-001	LCD LENS		1
	7	VJD5278-001	BUTTON PLATE(L)		1
	8	VJD5279-001	BUTTON PLATE(R)		1
	9	VJD5280-001	BADGE		1
	10	VXP4961-001	PUSH BUTTON	3D/LIVE PHONIC	2
	11	VJD5281-001	3D PLATE		1
	12	VJD5282-001	FOOT BELT		2
	13	VYH7145-001	LOCK LEVER		1
	14	VJT3294-001	LID		1
	15	VKW4881-001	TORSION SPRING		1
	16	VJD5283-001	LOCK COVER		1
	17	SDSF2606M	SCREW	LOCK COVER	4
	18	VJD5285-001	SPRING HOLDER		1
	19	SDSF2606M	SCREW		2
	20	VKW4882-003	CD DOOR SPRING		1
	21	VYH7152-001	JOINT BRACKET		4
	22	VKZ4172-002	SPECIAL SCREW	JOINT BKT/F.CABI.	4
		VKZ4172-002	SPECIAL SCREW	JOINT BKT/F.CABI.	4
	23	VYH7146-001	EJECT LEVER		1
	24	VXP4962-001	EJECT BUTTON		1
	25	E65923-001	TAPPING SCREW	EJECT LEVER	1
	26	VYH7161-001	LAMP CASE	TIMER BOARD	1
	27	VYTT560-001	SCREEN	TIMER BOARD	1
	28	VYH7162-001	LCD HOLDER	TIMER BOARD	1
	29	VYH7149-001	LED HOLDER		1
	30	SBSF3010Z	SCREW	TIMER BOARD	2
	31	VXP3372-001	CD BUTTON	CD OPERATION	1
	32	VYH3569-001	VR HOLDER		1
	33	SBSF3010Z	SCREW	CD KEY BOARD	1
	34	SBSF3018Z	SCREW	VOLUME HOLDER	4
	35	VXL4301-002	VOLUME KNOB		1
	36	SBSF2006Z	SCREW	LED BOARD,KNOB	1
	37	VXP3373-001	POWER BUTTON		1
	38	VYH7150-001	LED HOLDER		1
	39	VXP4964-001	FUNCTION BUTTON	TAPE	1
	40	VXP4964-002	FUNCTION BUTTON	TUNER	1
	41	VXP4964-003	FUNCTION BUTTON	CD	1
	42	VXP4964-004	FUNCTION BUTTON	PHONO	1
	43	VXP4965-001	PUSH BUTTON	DUBBING	1
	44	VXP4965-002	PUSH BUTTON	DOLBY	1
	45	VXP4965-003	PUSH BUTTON	METAL/FM MODE	1
	46	VYH3578-001	SEA HOLDER		1
	47	SBSF3010Z	SCREW	FUNCTION BOARD	1
		SBSF3010Z	SCREW	SEA BOARD	2
	48	SBSF3018Z	SCREW	SEA HOLDER	4
	49	VYH7159-001	LAMP CASE	DTS BOARD	1
	50	VYH7074-001MM	SHEET	DTS BOARD	1
	51	VYH7160-001	LCD HOLDER	DTS BOARD	1
	52	SBSF3010Z	SCREW	DTS BOARD	3
	53	SBSF3010Z	SCREW	MECHANISM	6
	54	VYH6799-001	REC.SPRING		1
	55	SDST2004Z	SCREW	REC.SPRING	1
	56	VYH7155-001	PCB BRACKET (L)		1
	57	VYH7156-001	PCB BRACKET (R)		1
	58	SDST3006Z	SCREW	BOARD BRACKET	4
	59	SPST2006Z	SCREW	PCB BRACKET(R)	3
	60	VYH5601-001	GEAR		2
	61	VYH5602-001	DAMPER HOLDER		2
	62	GBSF3012Z	SCREW		2
	63	VJT2241-001	CASS DOOR	LEFT	1
	64	VJT2242-001	DOOR COVER		1
	65	VJT3296-001	DOOR LENS		1
	66	VJT4173-001	CASSETTE LENS		1
	67	VJT2241-002	CASS DOOR	RIGHT	1
	68	VJT2242-002	DOOR COVER		1
	69	VJT3296-002	DOOR LENS		1
	70	VJT4173-002	CASSETTE LENS		1
	71	VKY4180-001	CASSETTE SPRING		4
	72	VKW4883-001	DOOR SPRING		2
	73	VXP3267-009	MECHA BUTTON	REC.	1
	74	VXP3267-002	MECHA BUTTON	PLAY	2
	75	VXP3267-003	MECHA BUTTON	REW	2
	76	VXP3267-004	MECHA BUTTON	FF	2
	77	VXP3267-005	MECHA BUTTON	STOP/EJECT	2
	78	VXP3267-006	MECHA BUTTON	PAUSE	1
	79	VXP3267-007	MECHA BUTTON	MODE	1
	80	VXP3267-008	MECHA BUTTON	DIRECTION	1
	81	VKS4843-002	BUTTON LEVER		12
	82	VKL6107-002	BUTTON BRACKET		2
	83	SSSF2608Z	SCREW	BUTTON BRACKET	8
	84	SBSF3010Z	SCREW	H.PHONE BOARD	1
	85	E65923-001	TAPPING SCREW		1
	86	VYH2244-003	3D BASE		1
	87	VYH3599-001	DUCT		2
	88	GBSF3012Z	SCREW	DUCT/3D BASE	4
	89	VYH1198-001	3D COVER (F)		1
	90	VYH1197-001	3D COVER (R)		1
	91	EAS10PL482A3	SPEAKER		1
	92	VYH3600-001	SPACER		1

⚠	REF.	PARTS NO.	PARTS NAME	REMARKS	QTY
	93	GBSF3012Z	SCREW	SPEAKER/BASE	4
	94	GBSF3020Z	SCREW	3D COVER(F)	7
	95	SBSF3025Z	SCREW	3D COVER(F)	1
	96	VYH7170-001	JOINT BRACKET L		1
	97	VYH7171-001	JOINT BRACKET R		1
	98	GBSF3012Z	SCREW	JOINT BRACKET/3D	4
	99	SSST3006Z	SCREW	JOINT BRACKET/CD	4
	100	SBSF3020Z	SCREW	FRONT/3D	2
	101	VJT2243-001	CD DOOR		1
	102	VYH7195-001	DOOR PROTECTOR		1
	103	SSSP2003Z	SCREW		3
	104	VJT3297-001	CD DOOR LENS		1
	105	VYH5601-001	GEAR		1
	106	VJD2355-001	TOP COVER		1
	107	VJC1896-002	REAR CABINET		1
	108	VJA3006-00E	ROD ANTENNA		1
	109	VYH5012-002	LUG TERMINAL		1
	110	VJH2006-003	HANDLE (A)	LEFT	1
	111	VJH2007-003	HANDLE (B)	LEFT	1
	112	SHSF3012M	SCREW	HANDLE(A)+(B)	4
		SHSF3012M	SCREW	HANDLE(A)+(B)	4
		SHSF3012M	SCREW	GRIL	2
	113	GBSF3016Z	SCREW	HANDLE/REAR	2
		GBSF3016Z	SCREW	HANDLE/REAR	2
	114	VJH2006-004	HANDLE (A)	RIGHT	1
	115	VJH2007-004	HANDLE (B)	RIGHT	1
	116	VYSH102-042	SPACER		1
	117	VYSH103-080	SPACER		2
	118	VJD3836-002	GRILL		1
	119	VYSH101-012	SPACER		1
	120	VYH3575-002	TRANS BRACKET		1
	121	VKZ3001-002	SPECIAL SCREW	TRANS/T.BRACKET	4
	122	SDST3006Z	SCREW	POWER BOARD	1
	123	GBSF3012Z	SCREW	TRANS BRACKET/REA	6
	124	VYH7199-001	BATTERY SPRING		1
	125	GBSF3012Z	SCREW	BATTERY BOARD	2
	126	VYH3576-001	HEAT SINK		1
	127	SBSF3010Z	SCREW	HEAT SINK	3
	128	SBSF2608Z	SCREW	HEAT SINK/IC,TR	7
	129	VYH3577-003	AMP BRACKET	LEFT	1
	130	VYH3577-004	AMP BRACKET	RIGHT	1
	131	SDST3006Z	SCREW	AMP BRACKET	2
	132	SDST3006Z	SCREW	AMP BRACKET	2
	133	SBSF3010Z	SCREW	AMP BRACKET,3D	4
	134	SDSF3018M	SCREW	CD DOOR	2
		SDSF3018M	SCREW	CD TOP	2
	135	SDSF3018M	SCREW		3
	136	SDST3006M	SCREW	CD MECHA.	2
		SDST3006M	SCREW	FRONT	2

⚠	REF.	PARTS NO.	PARTS NAME	REMARKS	QTY
	138	SDST3006M	SCREW	REAR/REF.21	4
	139	SDSF3018M	SCREW	PIN JACK	1
	140	SDSF3018M	SCREW	SPEAKER TERMINAL	1
	141	VYN7048-004T	NAME PLATE	PC-X1000 B	1
	141	VYN7048-002T	NAME PLATE	PC-X1000 E	1
	142	SDST3005Z	SCREW	RELAY PCB	1
	145	SDST3012N	SCREW		1
	146	VGL1033-002	LCD	LCD	1
	151	VYSN1R1-001	SPACER		1
	152	SDSF2606Z	SCREW		2
	153	SDST2605Z	SCREW		1
	154	VND4220-001	LASER CAUTION		1
	155	E71541-001	E1 LASER MARK	F992 : PC-X1000 E	1
	156	QMF51E2-6R3J1	FUSE		1
		QMF51E2-6R3J1BS	FUSE	F992 : PC-X1000 B	1
	157	QMF51E2-2R5J1	FUSE	F993 : PC-X1000 E	1
		QMF51E2-2R5J1BS	FUSE	F993 : PC-X1000 B	1
	158	QMF51E2-2R0J1	FUSE	F991 : PC-X1000 E	1
		QMF51E2-2R0J1BS	FUSE	F991 : PC-X1000 B	1
⚠	159	VTP76C4-24A	POWER TRANS	PC-X1000 E	1
⚠		VTP76C4-24ABS	POWER TRANS	PC-X1000 B	1
	160	VND4003-064	FUSE LABEL		1
	161	VND4003-050	FUSE LABEL		1
	162	VND4003-019	FUSE LABEL		1

■ Speaker Box Section

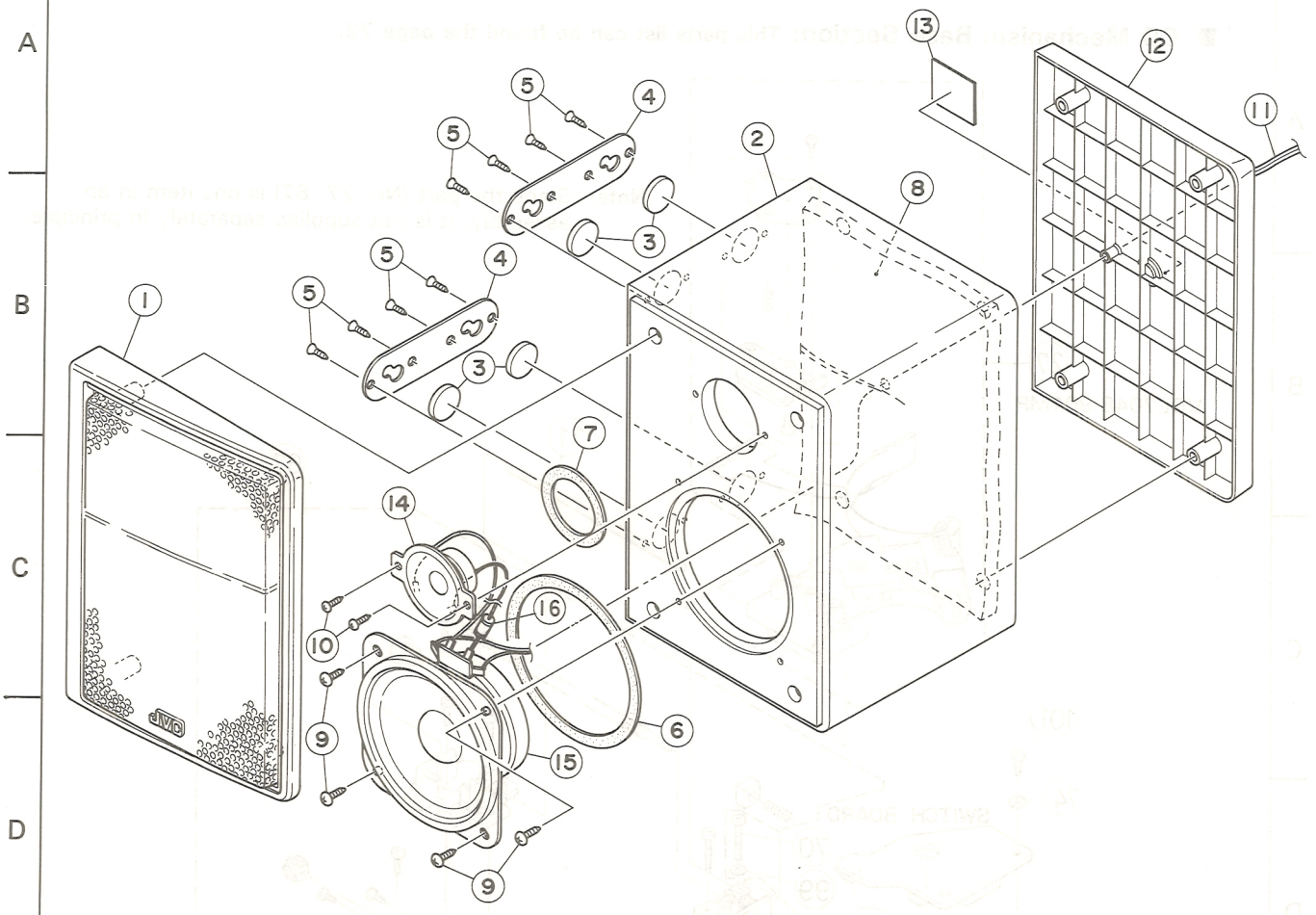

Fig. 13-2

■ Speaker Box Section Parts List

⚠	Ref.	Parts No.	Parts Name	Remarks	Q'ty
	1	VJC2398-00B	Speaker Panel Ass'y	Right	1
		VJC2398-00A	〃	Left	1
	2	VJC2395-002	Speaker Box	Right	1
		VJC2395-001	〃	Left	1
	3	VYH4934-002	Spacer	Left, Right	8
	4	VJD5313-002	Plate	Right	2
		VJD5313-001	〃	Left	2
	5	SSSA3012M	Screw	Plate + Box: L, R	16
	6	VYTH490-001	Packing	For Speaker	2
	7	VYTH490-002	〃	〃	2
	8	VKZ4389-002	Sound absober		2
	9	SDSA4012M	Screw	For Speaker	8
	10	SDSA3510M	〃		4
	11	VMP0087-001	Speaker Cord		2
	12	VJC2396-001	Speaker Rear Panel		2
	13	VYN7048-001B	Name Plate		2
	14	EAS12PL455A-G	Speaker		2
	15	EAS5PH73B-G	〃		2
	16	QEN41HK-155	Condencer	1.5 μF	2

14 Exploded View of CD Changer Mechanism Component Parts

■ **CD Mechanism Base Section:** **This parts list can be found the page 73.**

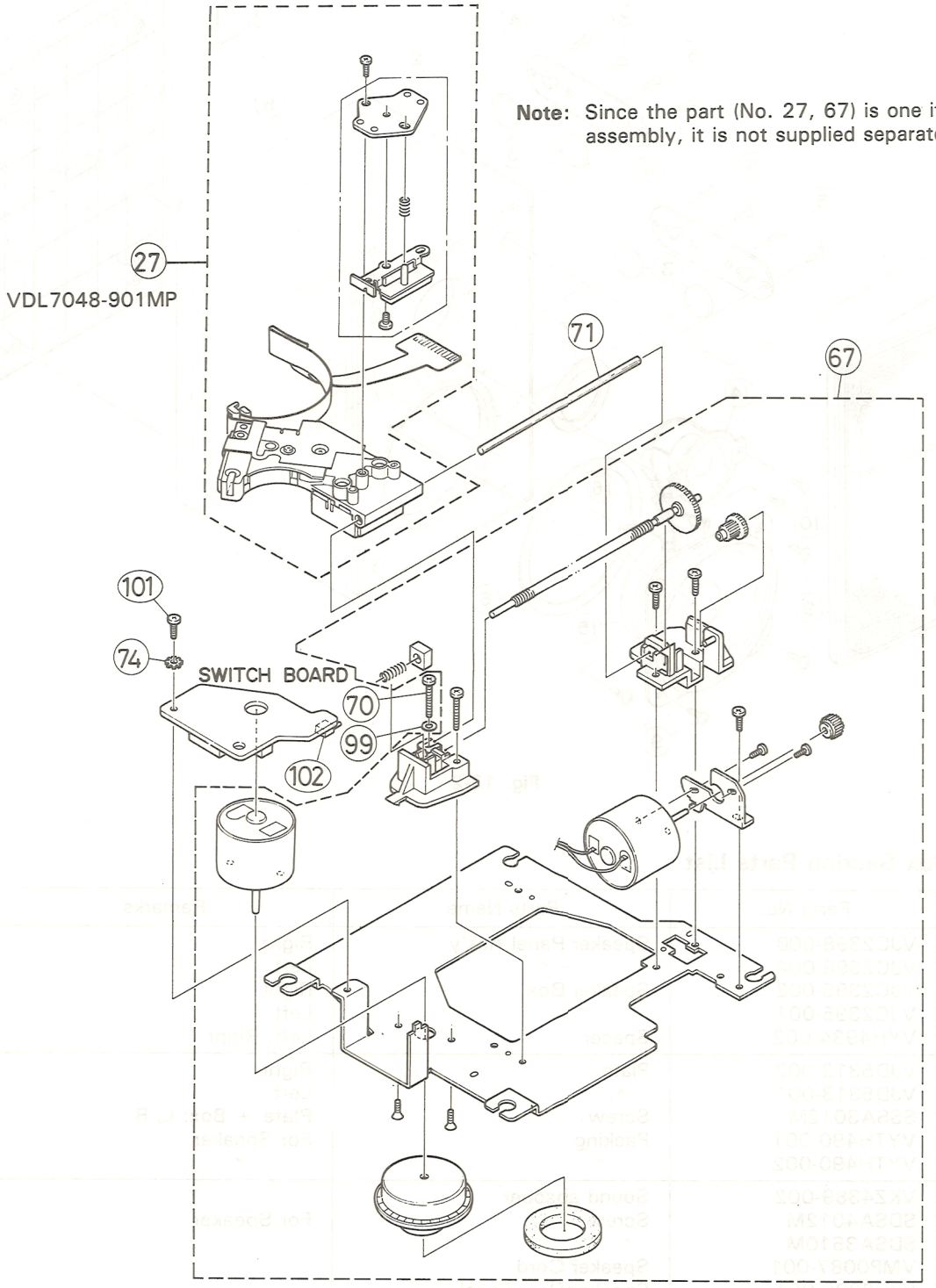

Note: Since the part (No. 27, 67) is one item in an assembly, it is not supplied separately in principle.

Fig. 14-1

■ **CD Changer Mechanism Sections:** **This parts list can be found the page 73.**

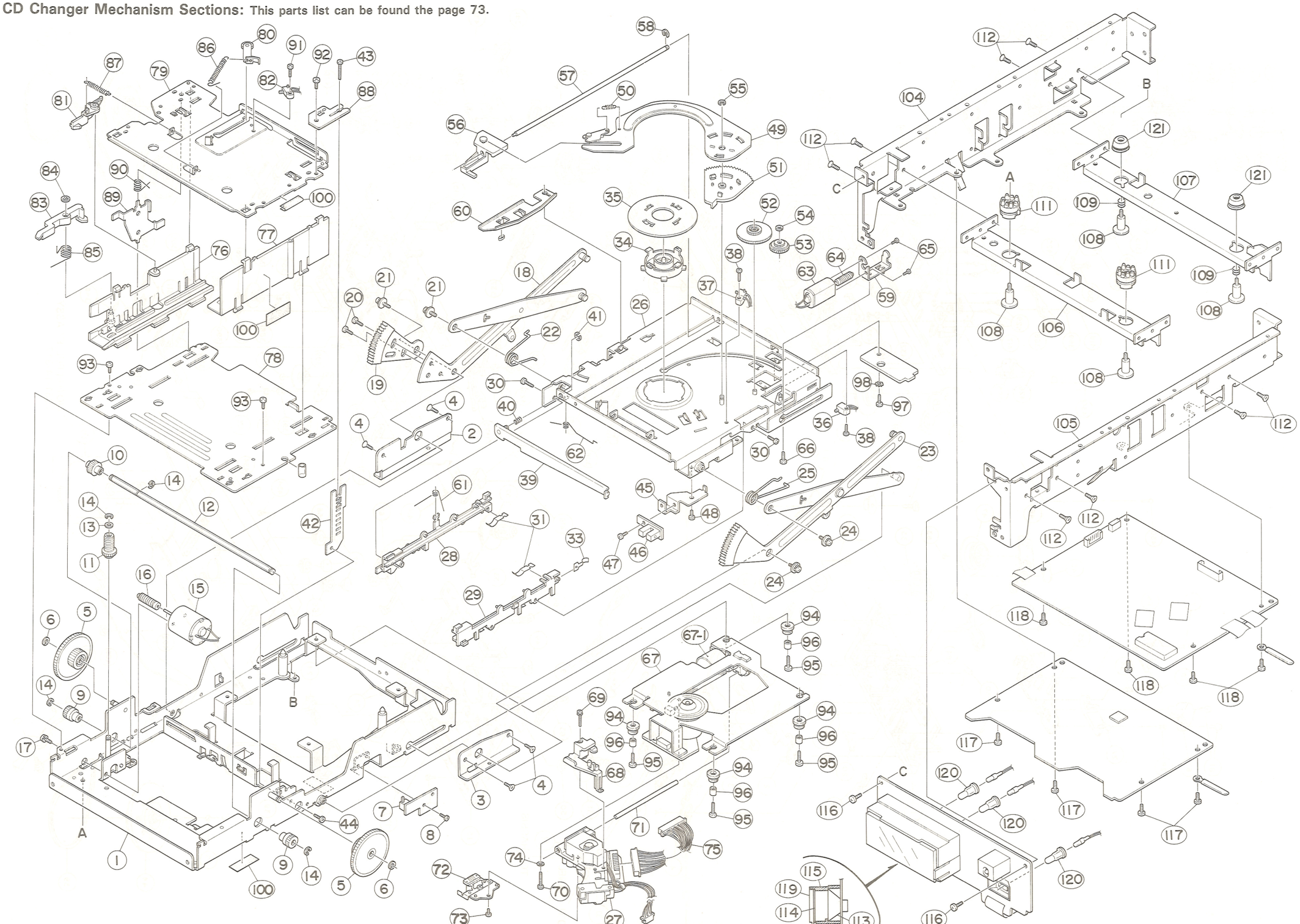

Fig. 14-2

15 Exploded View of Cassette Mechanism Component Parts

: This parts list can be found the page 75.

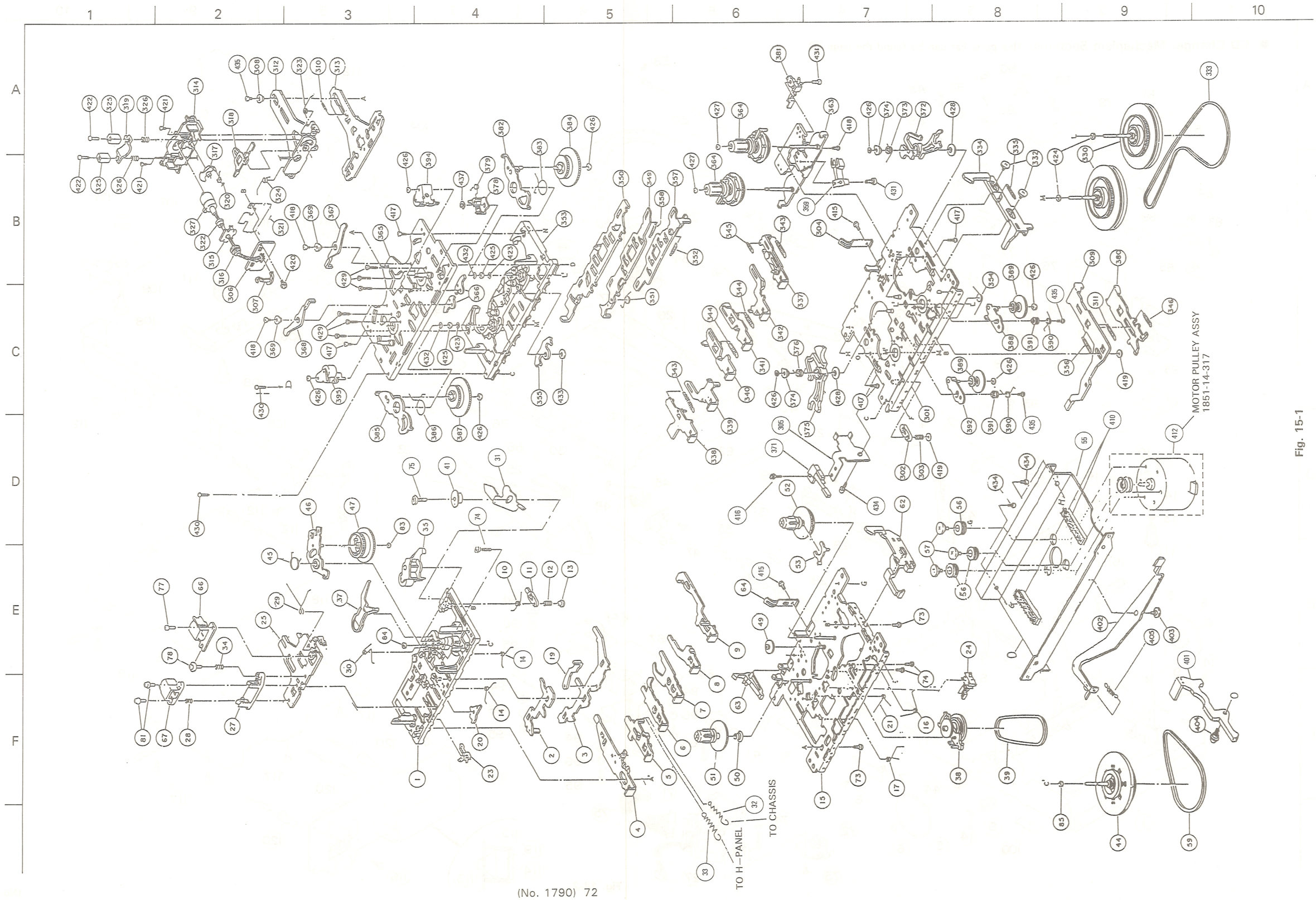

Fig. 15-1

■ CD Changer Mechanism Component Parts List

⚠	REF.	PARTS NO.	PARTS NAME	REMARKS	QTY
	1	VKL1304-00E	M.CHASSIS ASS'Y		1
	2	VKL6767-003	SIDE BKT.(L)		1
	3	VKL6768-002	SIDE BKT.(R)		1
	4	SSSP2603Z	SCREW	SIDE BRACKET L,R	4
	5	VKR4534-003	MAIN GEAR		2
	6	WDM266050	SLIT WASHER		2
	7	VSH1153-001	SWITCH	FOR INITIALIZE	1
	8	SDST2005Z	SCREW	REF.NO.7	1
	9	VKR4584-002	SUB GEAR		2
	10	VKR4585-001	DRIVING WHEEL		1
	11	VKR4586-001	WORM WHEEL		1
	12	VKH5258-002	DRIV.SHAFT		1
	13	WFM416025	WASHER	REF.NO.11	1
	14	REE2500X	E WASHER		1
		REE2500X	E WASHER	REF.NO.11,13	3
	15	MXN-13FB08F	D.C. MOTOR	FOR UP/DOWN	1
	16	VKR4538-003	DRIVING WORM		1
	17	LPSP3004Z	SCREW	FOR MOTOR	1
	18	VKM3171-00B	L.ARM(L) UNIT		1
	19	VKL6659-001	SUB LIFT ARM		1
	20	SDST3004Z	SCREW	REF.NO.19+18	2
	21	DPSP2606Z	SCREW	REF.NO.19+18	2
	22	VKW4785-002	TORSION SP.(L)		1
	23	VKM3178-00A	L.ARM(R) UNIT		1
	24	DPSP2606Z	SCREW	REF.NO.23	2
	25	VKW4787-003	TORSION SP.(R)		1
	26	VKL2478-00J	LIFTER ASS'Y		1
	27	VDL7048-901MP	P.U.UNIT		1
	28	VKS3382-005	RAIL (L)		1
	29	VKS3383-004	RAIL (R)		1
	30	SDSF2606Z	SCREW		2
	31	VKY4564-001	LEAF SPRING(A)	TRAY PRESSUER	1
		VKY4564-001	LEAF SPRING(A)		1
	33	VKY4565-001	LEAF SPRING(B)	TRAY GUIDE	1
	34	VKS3421-00A	CLAMPER ASS'Y		1
	35	VKL6662-001	STABILIZER		1
	36	VSH1143-001	SWITCH	TRAY IN	1
	37	VSH1142-001	SWITCH	TRAY OUT	1
	38	SDST2006Z	TAPPING SCREW		2
	39	VKL6578-00A	PROTECT L.ASS'Y		1
	40	VKW3001-252	COMP. SPRING	PROTECT LEVER	1
	41	REE2000X	E.WASHER		1
	42	VKL6869-002	SENSER PLATE		1
	43	SPSP2613Z	SCREW		1
	44	SDSP2604Z	SCREW		1
	45	VKL6548-001	P.C. BRACKET		1
	46	GP1S52	PHOTO INTERRUP.		1
	47	SDST2605Z	SCREW		1
	48	SDST2605Z	SCREW		1

⚠	REF.	PARTS NO.	PARTS NAME	REMARKS	QTY
	49	VKM3257-00A	LOAD.ARM ASS'Y		1
	50	VKW3002-251	TENSION SPRING	LOARD ARM	1
	51	VKR3167-002	LOAD.GEAR (1)		1
	52	VKR4587-002	LOARD GEAR(2)		1
	53	VKR4588-001	LOAD.WHEEL		1
	54	WDL214050	SLIT WASHER		1
	55	REE2500X	E WASHER		1
	56	VKS3423-00B	HOOK ASS'Y		1
	57	VKH5262-001	GUIDE SHAFT		1
	58	REE2000X	E.WASHER		1
	59	VKL6665-003	MOTOR BRACKET		1
	60	VKM3382-002	EJECT ARM		1
	61	VKW3006-206	TORSION SPRING	EJECT ARM	1
	62	VKW4791-002	TORSION SPRING		1
	63	PPN-13MK03D	MOTOR		1
	64	VKR4548-003	WORM GEAR		1
	65	SPSK2025M	MINI SCREW	MOTOR	2
	66	SDST2605Z	SCREW	LIFTER	1
	67	VKL2451-00C	MECH.BASE UNIT		1
	67-1	MDN-4RA2MYBS	D.C. MOTOR		1
	68	VKS5200-00A	PU.SUPORT ASS'Y		1
	69	LPSP2012Z	SCREW		1
	70	SDSR2011Z	SCREW	REF.NO.67	1
	71	VKH3012-066	SHAFT(E)		1
	74	WBS2000N	T. LOCK WASHER	SWITCH BOARD	1
	75	EWS25A-B103	SKT WIRE ASS'Y		1
	76	VKS2189-003	MAGAZINE H(L)		1
	77	VKS2190-001	MAGAZINE H(R)		1
	78	VKL2424-003	M.H.PLATE		1
	79	VKL2430-004	M.H.TOP PLATE		1
	80	VKL6552-00B	EJECT P. ASS'Y		1
	81	VKS3456-001	LOCK LEVER		1
	82	VSH1142-001	SWITCH	MAGAZINE IN	1
	83	E73413-001	LEVER		1
	84	RDS2000Z	CS RING	REF.83	1
	85	VKW4801-001	TORSION SPRING		1
	86	VKW3002-264	TENSION SPRING		1
	87	VKW4010-019	TENSION SPRING		1
	88	VKL6554-001	PLATE HOLDER		1
	89	VKM3383-001	EJECT LEVER		1
	90	VKW4030-005	TORSION SPRING	EJECT LEVER	1
	91	SPSP2005Z	SCREW	REF.NO.82	1
	92	SDST2605Z	SCREW	REF.NO.88	1
	93	SDST2605Z	SCREW	CHASSIS	2
	94	VKZ4570-001	DAMPER		4
	95	SDST2608Z	SCREW		4
	96	VKZ4571-001	COLLAR		4
	98	WBS2600N	WASHER		1
	99	VKZ4610-001	WASHER	REF.NO.70	1
	100	VYSA1R4-056	SPACER		2
		VYSA1R4-056	SPACER		4
	101	SDST2005Z	SCREW	SWITCH BOARD	1
	102	VSH1153-001	SWITCH	RESET,SPINDLE MOT	1
	104	VYH3572-001	MAIN FLAME (L)		1

⚠	REF.	PARTS NO.	PARTS NAME	REMARKS	QTY
	105	VYH3573-001	MAIN FLAME (R)		1
	106	VYH7163-001	SUB FLAME (F)		1
	107	VYH7164-001	SUB FLAME (R)		1
	108	VKZ4585-001	SPECIAL SCREW		4
	109	VKW3001-280	C.SPRING		2
	111	VYH7167-001	CD CUSHION		2
	112	SSST3006Z	SCREW	MAIN FLAM	8
	113	VYH7168-001	LAMP CASE	LCD BOARD	1
	114	VYTT560-002	SCREEN		1
	115	VYH7169-001	LCD HOLDER		1
	116	SDST3006Z	SCREW	LCD BOARD,MAIN FR	2
	117	SDST3006Z	SCREW	DRECTION BOARD	4
	118	SDST3006Z	SCREW	AMP BOARD	4
	119	VGL1076-001	LCD	LC701	1
	120	VGZ0001-028V	P.LAMP	PL701	1
		VGZ0001-028V	P.LAMP	PL702	1
		VGZ0001-028V	P.LAMP	PL703	1
	121	VYH7287-001	CD CUSHION		2

■ Cassette Mechanism Component Parts List

⚠	REF.	PARTS NO.	PARTS NAME	REMARKS	QTY
	412	**185114317T**	**MOTOR ASS'Y**		**1**
	1	192114301T	BASE ASS'Y		1
	2	19211409T	SWITCH ACTUATOR		1
	3	19211438T	PUSH BUTTON ACTUATOR		1
	4	19211422T	REC BUTTON LEVER		1
	5	19211484T	PLAY BUTTON LEVER		1
	6	19211424T	REW BUTTON LEVER		1
	7	19211425T	FF BUTTON LEVER		1
	8	19211426T	STOP BUTTON LEVER		1
	9	19211461T	PAUSE BUTTON LEVER		1
	10	19211413T	P. CONTROL SPRING		1
	11	19211455T	PAUSE LEVER (E)		1
	12	19211412T	PAUSE LEVER SPRING		1
	13	19211411T	PAUSE STOPPER		1
	14	19211414T	BUTTON LEVER SPRING (A)		2
	15	192101501T	CHASSIS ASS'Y		1
	16	19211416T	E ACTUATOR SPRING		1
	17	19211417T	P.S. LEVER SPRING		1
	19	182101159T	E. KICK LEVER		1
	20	19211420T	P.R. STOPPER		1
	21	19211421T	REC BUTTON LEVER SPRING		1
	23	640101149T	LEAF SWITCH MSW-1541T		1
	24	640101161T	LEAF SWITCH MSW-17820MVDO		1
	25	19210312T	HEAD PANEL		1
	27	19210306T	HEAD BASE		1
	28	18210308T	E.H. SPRING		1

⚠	REF.	PARTS NO.	PARTS NAME	REMARKS	QTY
	29	19210309T	PANEL P SPRING		1
	30	19211418T	M. CONTROL SPRING		1
	31	19211434T	P. ARM		1
	32	18211311T	E. SLIDE LEVER SPRING		1
	33	18210150T	PLAY BUTTON LEVER SPRING		1
	34	18210307T	AZIMUTH SPRING		1
	35	192104306T	PINCH ROLLER ARM ASS'Y		1
	37	19212604T	SENSING LEVER		1
	38	192107302T	RF CLUTCH ASS'Y		1
	39	18210711T	RF BELT		1
	41	19211437T	P. ARM COLLAR		1
	44	192109309T	FLYWHEEL ASS'Y		1
	45	19212605T	GEAR PLATE SPRING		1
	46	192126502T	GEAR PLATE ASS'Y		1
	47	19212602T	CAM GEAR		1
	49	18211070T	FF GEAR		1
	50	18291010T	BACK TENSION SPRING		1
	51	192105304T	SUPPLY REEL ASS'Y		1
	52	192105303T	TAKE UP REEL ASS'Y		1
	53	19210506T	SENSOR		1
	55	18511436T	MOTOR BRACKET		1
	56	18201306T	MOTOR RUBBER		3
	57	18211202T	MOTOR COLLAR SCREW		3
	59	19210927T	MAIN BELT		1
	62	19211302T	EJECT SLIDE LEVER		1
	63	18211069T	RECORD SAFETY LEVER		1
	64	18291001T	PACK SPRING		1
	66	62020178T	R.P. HEAD VGH0421-020		1
	67	62021421T	E. HEAD LE15A-C1		1
	73	69790000T	P. TAPPING BIND SCREW	M2x5	2
	74	99991809T	CAMERA TAPPING SCREW	M2x4.5	3
	75	99992041T	P.S. TAPPING SCREW	M2x3	1
	77	91150000T	+ BIND SCREW	M2x3	1
	78	99220000T	AZIMUTH SCREW	M2x7	1
	80	91780000T	C. TAPPING SCREW	M2x3 (SPECIAL)	1
	81	92230000T	CAP SCREW	M2x7.5	2
	83	94220000T	P. WASHER CUT	1.2x3.8x0.3	1
	84	99990313T	P. WASHER CUT	1.45x3.8x0.5	1
	85	97860000T	P. WASHER	2x3.5x0.3	1
	301	185101303T	CHASSIS ASS'Y		1
	302	18210115T	PAUSE LEVER		1
	303	18210116T	PAUSE LEVER SPRING		1
	304	18291006T	PACK SPRING		1
	305	18510118T	DIRECTION SWITCH BLACKET		1
	306	18510106T	H.W. TERMINAL PLATE		1
	307	18650965T	WIRE CLUMP		1
	308	18510453T	H.P. COLLAR V		1
	309	18510408T	RELEASE PLATE		1
	310	18510409T	R.C. PLATE SPRING		1
	311	18510411T	R.C. SPRING (M)		1
	312	18510414T	HEAD PANEL		1
	313	18510415T	R.C. PLATE		1
	314	18510439T	HEAD MOUNT		1
	315	18510418T	HOLDER		1
	316	18510444T	PINION GEAR		1
	317	18510420T	H TURN OVER GEAR		1

⚠	REF.	PARTS NO.	PARTS NAME	REMARKS	QTY
	318	18510421T	HEAD SLIDE PLATE		1
	319	18510424T	HEAD SPRING PLATE		1
	320	18510425T	H. TURN OVER SPRING		1
	321	18510441T	H. SHIELD PLATE		1
	322	18510427T	H. HOLDER SPRING		1
	323	18510428T	PINCH ROLLER SPRING (F)		1
	324	18510429T	PINCH ROLLER SPRING (R)		1
	325	18510436T	SCREW HOLDER		2
	326	18650259T	AZIMUTH SPRING (D)		2
	327	62020172T	RP HEAD YK10R-SS0C0		1
	330	185112504T	FLYWHEEL ASS'Y		2
	332	18211223T	P.K. COLLAR SCREW (A)		2
	333	1851417T	MAIN BELT		1
	334	18511703T	EJECT SLIDE LEVER		1
	335	18511702T	EJECT SLIDE LEVER SPRING		1
	337	185102312T	PROG BUTTON LEVER ASS'Y		1
	338	185102325T	MODE BUTTON LEVER ASS'Y		1
	339	18510232T	PLAY BUTTON LEVER		1
	340	18510235T	FF BUTTON LEVER (R)		1
	341	18510234T	FF BUTTON LEVER (F)		1
	342	18510231T	STOP BUTTON LEVER		1
	343	18510286T	MR. BUTTON LEVER SPRING		2
	344	18510269T	FF BUTTON LEVER SPRING		2
	345	18510227T	PULL ARM SPRING		1
	346	18511606T	FF SWITCH PLATE SPRING		1
	349	185102321T	LOCK ACTUATOR ASS'Y		1
	350	18510256T	SLIDE PLATE		1
	351	18510276T	LOCK RELEASE SPRING		1
	352	18510267T	SWITCH ACTUATOR SPRING		1
	353	185102504T	BUTTON BASE ASS'Y		1
	354	18510221T	STOP BUTTON LEVER SPRING		1
	355	18510241T	FF CONTROL ARM		1
	356	18510242T	BUTTON LEVER SPRING (P)		1
	357	185102322T	SWITCH ACTUATOR ASS'Y		1
	358	18510225T	LOCK ACTUATOR SPRING		1
	359	64010138T	LEAF SWITCH MSW-1275		1
	363	185111301T	REEL PLATE ASS'Y		1
	364	185111501T	REEL ASS'Y		2
	365	185118303T	SUB CHASSIS ASS'Y		1
	366	18511810T	RC ARM		2
	367	18511805T	AUTO CONTROL ARM (F)		1
	368	18511806T	AUTO CONTROL ARM (R)		1
	369	18511807T	CONTROL ARM COLLAR		2
	371	64010199T	LEAF SWITCH MSW-1473NBK		1
	372	18512001T	AUTO LEVER (F)		1
	373	18512003T	AUTO LEVER (R) SPRING		1
	374	18512005T	SPRING STOPPER		2
	375	18512002T	AUTO LEVER (R)		1
	376	18512004T	AUTO LEVER (F) SPRING		1
	378	18510303T	TURN OVER ARM		1
	379	18510304T	TURN OVER SPRING		1
	380	18511602T	FF SWITCH PLATE		1
	381	640101151T	LEAF SWITCH MSW-1290CV		1
	382	185105302T	T GEAR ARM (F) ASS'Y		1
	383	18510504T	T GEAR ARM (F) SPRING		1
	384	18510503T	T CAM GEAR (F)		1
	385	185106302T	T GEAR ARM (R) ASS'Y		1

⚠	REF.	PARTS NO.	PARTS NAME	REMARKS	QTY
	386	18510603T	T GEAR ARM (R) SPRING		1
	387	18510602T	T CAM GEAR (R)		1
	388	185107301T	FF GEAR ARM (F) ASS'Y		1
	389	18510703T	FF GEAR		2
	390	18510704T	FF GEAR ARM SPRING (F)		2
	391	18510705T	FF GEAR ARM COLLAR		2
	392	185108301T	FF GEAR ARM (R) ASS'Y		1
	394	185109502T	PINCH ROLLER (F) ASS'Y		1
	395	185110502T	PINCH ROLLER (R) ASS'Y		1

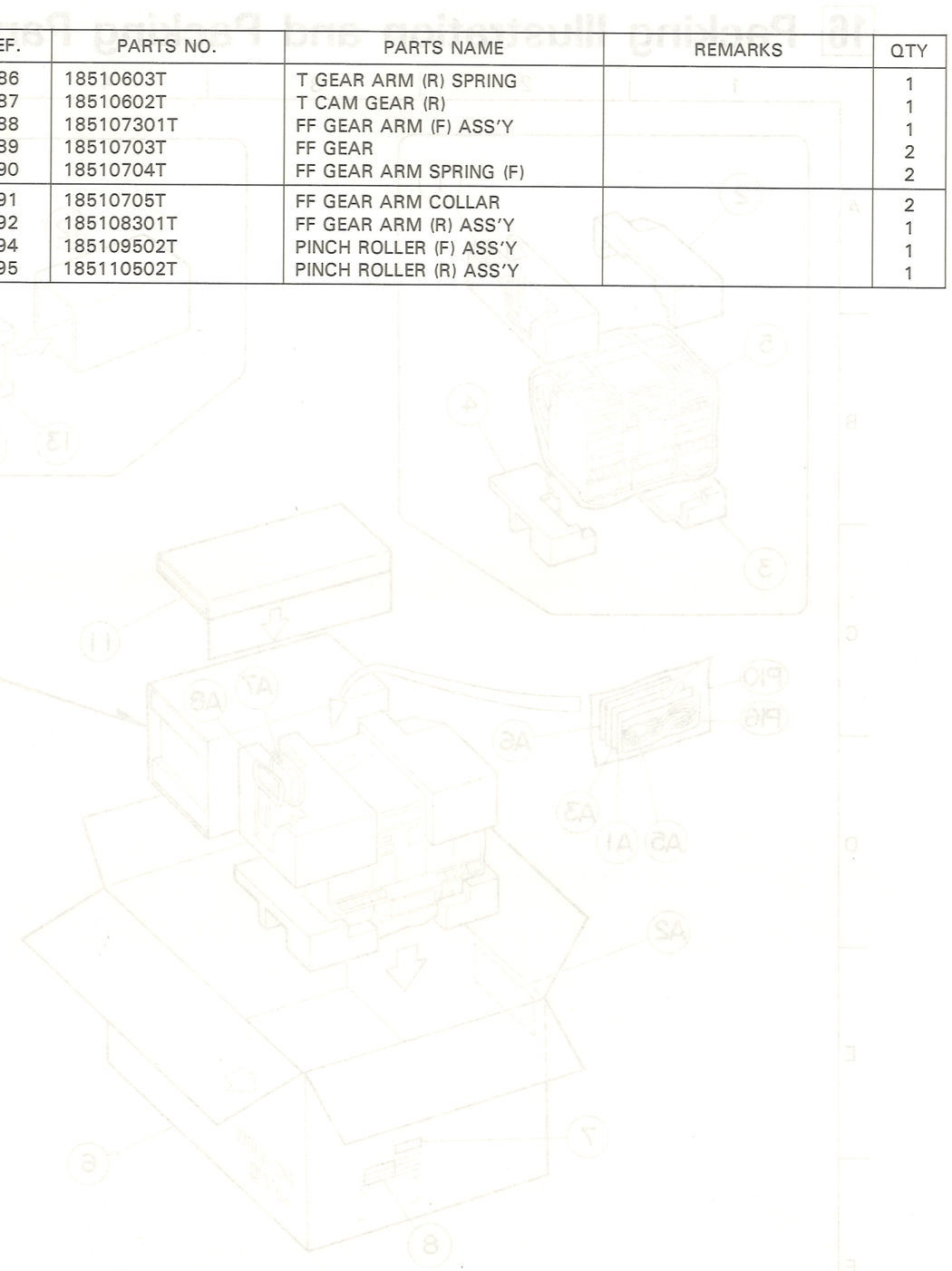

16 Packing Illustration and Packing Parts

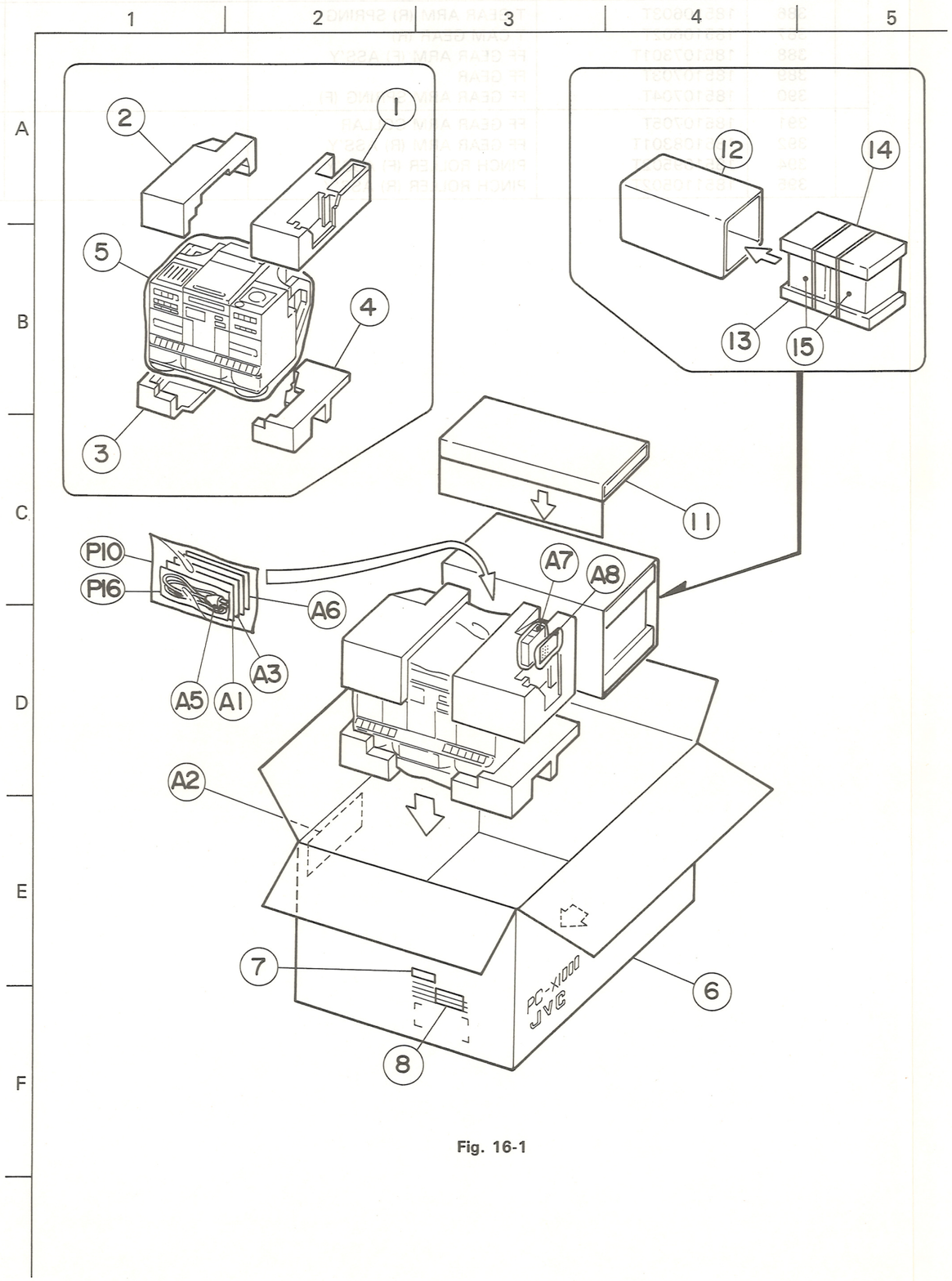

Fig. 16-1

■ Packing Parts List

⚠	Ref.	Parts No.	Parts Name	Remarks	Q'ty
	P1	VPH1515-002	Cushion	For right upper side	1
	P2	VPH1515-001	Cushion	For left upper side	1
	P3	VPH1514-001	Cushion	For left bottom side	1
	P4	VPH1514-002	Cushion	For right bottom side	1
	P5	VPE3005-051	Poly Bag	For set	1
	P6	VPC7048-101	Carton		1
	P7	VND3025-113	Bar Code label		1
	P8	VND3044-004	Serial Ticket	Green label: PC-X1000 B	1
	P8	VND3044-003	〃	Blue label: PC-X1000 E	1
	P9	E66416-003	Envelope	For warranty card	1
	P10	VPE3005-004	Poly Bag	For instruction book	1
	P11	VPK4250-001	Spacer	Carry up the speaker box	1
	P12	VPK3212-001	Sleeve	For speaker box	1
	P13	VPH3215-002	Cushion	For speaker box: bottom side	1
	P14	VPH3215-001	Cushion	For speaker box: upper side	1
	P15	VPE3010-006	Envelope	For speaker box	2
	P16	QPGA012-02505	〃	For power cord	1

■ Accessories

⚠	Ref.	Parts No.	Parts Name	Remarks	Q'ty
	A1	VNN7048-211	Instruction Book	PC-X1000 B/E	1
	A1	VNN7048-411	Instruction Book	PC-X1000 E	1
	A2	BT20066A	Warranty Card	PC-X1000 B/E	1
		BT20060	〃	PC-X1000 B	1
	A3	E43486-340B	Safety Instruction Sheet	PC-X1000 B	1
⚠	A5	QMP3950-183	Power Cord	PC-X1000 E	1
⚠		QMP5510-183BS	Power Cord	PC-X1000 B	1
	A6	UM4NJ-2P	Battery		2
	A7	E26072-005	Magazine Ass'y	with envelope	1
	A8	RM913	Remote Control Unit	with envelope	1

Electrical Parts List

PC-X1000 B/E

■ Contents

1. Pre Amplifier Board Parts List ..... Page 80
2. Function Board Parts List ..... Page 84
3. SEA/Function Switch Board Parts List ..... Page 90
4. Power Amplifier Board parts List ..... Page 92
5. Tuner Board Parts List ..... Page 94
6. DTS (Digital Tuning System) Board Parts List ..... Page 97
7. Power Supply Board Parts List ..... Page 98
8. CD Operation/Timer Board Parts List ..... Page 99
9. CD Amplifier Board Parts List ..... Page 100
10. CD Changer Control Board Parts List ..... Page 104

■ Pre Amplifier Board Parts List: VMW1226

⚠ parts are safety assurance parts.
When replacing those parts, make sure to use the specified one.

⚠	REF.	PARTS NO.	PARTS NAME		REMARKS
	CN301	QMV5011-003	CONNECTOR		
	CN302	QMV5011-007	CONNECTOR		
	CN303	VMC0155-007	CONNECTOR		
	CN304	VMC0155-003	CONNECTOR		
	CN305	VMC0155-002	CONNECTOR		
	C101	QCBB1HK-561Y	C.CAPACITOR		560PF 10% 50V
	C102	QCBB1HK-561Y	C.CAPACITOR		560PF 10% 50V
	C103	QETC1AM-107ZN	E.CAPACITOR		100MF 20% 10V
	C104	QFV41HJ-123	TF CAPACITOR		.012MF 5% 50V
	C105	QETC1HM-335ZN	E.CAPACITOR		3.3MF 20% 50V
	C106	QCC11EM-333	C.CAPACITOR		.033MF 20% 25V
	C107	QETC1HM-105ZN	E.CAPACITOR		1.0MF 20% 50V
	C108	QCBB1HK-331Y	C.CAPACITOR		330PF 10% 50V
	C109	QFV41HJ-123	TF CAPACITOR		.012MF 5% 50V
	C110	QCY41HK-822	C.CAPACITOR		8200PF 10% 50V
	C111	QETC1HM-475ZN	E.CAPACITOR		4.7MF 20% 50V
	C112	QCC31EM-273ZV	C.CAPACITOR		.027MF 20% 25V
	C113	QETC1HM-105ZN	E.CAPACITOR		1.0MF 20% 50V
	C114	QCBB1HK-102Y	C.CAPACITOR		1000PF 10% 50V
	C115	QCS11HJ-561	C.CAPACITOR		560PF 5% 50V
	C116	QETC1HM-335ZN	E.CAPACITOR		3.3MF 20% 50V
	C117	QCC11EM-104	C.CAPACITOR		.10MF 20% 25V
	C118	QCBB1HK-331Y	C.CAPACITOR		330PF 10% 50V
	C119	QETC1HM-474ZN	E.CAPACITOR		.47MF 20% 50V
	C120	QCBB1HK-331Y	C.CAPACITOR		330PF 10% 50V
	C121	QETC1HM-474ZN	E.CAPACITOR		.47MF 20% 50V
	C122	QETC1HM-474ZN	E.CAPACITOR		.47MF 20% 50V
	C123	QFV41HJ-224	TF CAPACITOR		.22MF 5% 50V
	C124	QETC1HM-474ZN	E.CAPACITOR		.47MF 20% 50V
	C125	QCBB1HK-331Y	C.CAPACITOR		330PF 10% 50V
	C201	QCBB1HK-561Y	C.CAPACITOR		560PF 10% 50V
	C202	QCBB1HK-561Y	C.CAPACITOR		560PF 10% 50V
	C203	QETC1AM-107ZN	E.CAPACITOR		100MF 20% 10V
	C204	QFV41HJ-123	TF CAPACITOR		.012MF 5% 50V
	C205	QETC1HM-335ZN	E.CAPACITOR		3.3MF 20% 50V
	C206	QCC11EM-333	C.CAPACITOR		.033MF 20% 25V
	C207	QETC1HM-105ZN	E.CAPACITOR		1.0MF 20% 50V
	C208	QCBB1HK-331Y	C.CAPACITOR		330PF 10% 50V
	C209	QFV41HJ-123	TF CAPACITOR		.012MF 5% 50V
	C210	QCY41HK-822	C.CAPACITOR		8200PF 10% 50V
	C211	QETC1HM-475ZN	E.CAPACITOR		4.7MF 20% 50V
	C212	QCC31EM-273ZV	C.CAPACITOR		.027MF 20% 25V
	C213	QETC1HM-105ZN	E.CAPACITOR		1.0MF 20% 50V
	C214	QCBB1HK-102Y	C.CAPACITOR		1000PF 10% 50V
	C215	QCS11HJ-561	C.CAPACITOR		560PF 5% 50V
	C216	QETC1HM-335ZN	E.CAPACITOR		3.3MF 20% 50V
	C217	QCC11EM-104	C.CAPACITOR		.10MF 20% 25V
	C218	QCBB1HK-331Y	C.CAPACITOR		330PF 10% 50V
	C219	QETC1HM-474ZN	E.CAPACITOR		.47MF 20% 50V
	C220	QCBB1HK-331Y	C.CAPACITOR		330PF 10% 50V

⚠	REF.	PARTS NO.	PARTS NAME		REMARKS
	C221	QETC1HM-474ZN	E.CAPACITOR		.47MF 20% 50V
	C222	QETC1HM-474ZN	E.CAPACITOR		.47MF 20% 50V
	C223	QFV41HJ-224	TF CAPACITOR		.22MF 5% 50V
	C224	QETC1HM-474ZN	E.CAPACITOR		.47MF 20% 50V
	C225	QCBB1HK-331Y	C.CAPACITOR		330PF 10% 50V
	C301	QETC1AM-107ZN	E.CAPACITOR		100MF 20% 10V
	C302	QETC1HM-104ZN	E.CAPACITOR		.10MF 20% 50V
	C303	QETC1AM-107ZN	E.CAPACITOR		100MF 20% 10V
	C304	QETC1AM-476ZN	E.CAPACITOR		47MF 20% 10V
	C305	QETC1AM-107ZN	E.CAPACITOR		100MF 20% 10V
	C306	QETC1AM-107ZN	E.CAPACITOR		100MF 20% 10V
	C307	QETC1CM-106ZN	E.CAPACITOR		10MF 20% 16V
	C308	QETC1AM-107ZN	E.CAPACITOR		100MF 20% 10V
	C309	QCC11EM-123	C.CAPACITOR		.012MF 20% 25V
	C310	QCBB1HK-102Y	C.CAPACITOR		1000PF 10% 50V
	C311	QFV71HJ-273ZM	TF.CAPACITOR		.027MF 5% 50V
	C314	QETC1AM-476ZN	E.CAPACITOR		47MF 20% 10V
	C315	QETC1HM-335ZN	E.CAPACITOR		3.3MF 20% 50V
	C316	QETC1CM-107ZN	E.CAPACITOR		100MF 20% 16V
	C317	QETC1CM-106ZN	E.CAPACITOR		10MF 20% 16V
	C318	QETC1AM-476ZN	E.CAPACITOR		47MF 20% 10V
	C320	QETC1AM-476ZN	E.CAPACITOR		47MF 20% 10V
	C321	QETC1EM-475ZN	E.CAPACITOR		4.7MF 20% 25V
	C322	QCC11EM-104	C.CAPACITOR		.10MF 20% 25V
	C323	QCC11EM-104	C.CAPACITOR		.10MF 20% 25V
	D101	HSS104TJ	SI DIODE		
	D102	HSS104TJ	SI DIODE		
	D103	MA700-TA	ZENER DIODE		
	D201	HSS104TJ	SI DIODE		
	D202	HSS104TJ	SI DIODE		
	D203	MA700-TA	ZENER DIODE		
	D301	HSS104TJ	SI DIODE		
	D310	HSS104TJ	SI DIODE		
	D311	HSS104TJ	SI DIODE		
	D312	HSS104TJ	SI DIODE		
	D313	HSS104TJ	SI DIODE		
	D314	HSS104TJ	SI DIODE		
	D315	HSS104TJ	SI DIODE		
	D316	HSS104TJ	SI DIODE		
	D317	HSS104TJ	SI DIODE		
	D318	HSS104TJ	SI DIODE		
	D319	HSS104TJ	SI DIODE		
	IC301	TA7739P	IC		
	IC302	LA3220	IC		
	IC303	HA12134A	IC		
	L101	VQP0001-103ZS	INDUCTOR		
	L102	VQP0001-562ZS	INDUCTOR		
	L201	VQP0001-103ZS	INDUCTOR		
	L202	VQP0001-562ZS	INDUCTOR		
	L301	VQH1009-034	OSC COIL(BIAS)		

⚠	REF.	PARTS NO.	PARTS NAME		REMARKS
	Q101	UN4210TA	TRANSISTOR		
	Q102	UN4210TA	TRANSISTOR		
	Q103	2SC2785(E,F)-T	TRANSISTOR		
	Q104	2SC2785(E,F)-T	TRANSISTOR		
	Q105	2SD1302(S,T)TA	TR.I M		
	Q201	UN4210TA	TRANSISTOR		
	Q202	UN4210TA	TRANSISTOR		
	Q203	2SC2785(E,F)-T	TRANSISTOR		
	Q204	2SC2785(E,F)-T	TRANSISTOR		
	Q205	2SD1302(S,T)TA	TR.I M		
	Q301	UN4213TA	TRANSISTOR		
	Q302	2SC2785(E,F)-T	TRANSISTOR		
	Q303	2SK301(P,Q)TA	FET I/M		
	Q304	UN4213TA	TRANSISTOR		
	Q305	2SC2785(E,F)-T	TRANSISTOR		
	Q306	2SC2785(E,F)-T	TRANSISTOR		
	Q307	UN4213TA	TRANSISTOR		
	Q309	UN4213TA	TRANSISTOR		
	Q310	2SD1302(S,T)TA	TR.I M		
	R101	QRD161J-101	CARBON RESISTOR		100 5% 1/6W
	R102	QRD161J-682	CARBON RESISTOR		6.8K 5% 1/6W
	R103	QRD161J-334	CARBON RESISTOR		330K 5% 1/6W
	R104	QRD161J-562	CARBON RESISTOR		5.6K 5% 1/6W
	R105	QRD161J-682	CARBON RESISTOR		6.8K 5% 1/6W
	R106	QRD161J-104	CARBON RESISTOR		100K 5% 1/6W
	R107	QRD161J-104	CARBON RESISTOR		100K 5% 1/6W
	R108	QRD161J-332	CARBON RESISTOR		3.3K 5% 1/6W
	R109	QRD161J-473	CARBON RESISTOR		47K 5% 1/6W
	R110	QRD161J-104	CARBON RESISTOR		100K 5% 1/6W
	R113	QRD161J-681	CARBON RESISTOR		680 5% 1/6W
	R114	QRD161J-823	CARBON RESISTOR		82K 5% 1/6W
	R115	QRD161J-154	CARBON RESISTOR		150K 5% 1/6W
	R116	QRD161J-102	CARBON RESISTOR		1.0K 5% 1/6W
	R117	QRD161J-121	CARBON RESISTOR		120 5% 1/6W
	R118	QRD161J-221	CARBON RESISTOR		220 5% 1/6W
	R119	QRD161J-473	CARBON RESISTOR		47K 5% 1/6W
	R120	QRD161J-223	CARBON RESISTOR		22K 5% 1/6W
	R121	QRD161J-682	CARBON RESISTOR		6.8K 5% 1/6W
	R122	QRD161J-123	CARBON RESISTOR		12K 5% 1/6W
	R123	QRD161J-154	CARBON RESISTOR		150K 5% 1/6W
	R124	QRD161J-822	CARBON RESISTOR		8.2K 5% 1/6W
	R125	QRD161J-683	CARBON RESISTOR		68K 5% 1/6W
	R201	QRD161J-101	CARBON RESISTOR		100 5% 1/6W
	R202	QRD161J-682	CARBON RESISTOR		6.8K 5% 1/6W
	R203	QRD161J-334	CARBON RESISTOR		330K 5% 1/6W
	R204	QRD161J-562	CARBON RESISTOR		5.6K 5% 1/6W
	R205	QRD161J-682	CARBON RESISTOR		6.8K 5% 1/6W
	R206	QRD161J-104	CARBON RESISTOR		100K 5% 1/6W
	R207	QRD161J-104	CARBON RESISTOR		100K 5% 1/6W
	R208	QRD161J-332	CARBON RESISTOR		3.3K 5% 1/6W

⚠	REF.	PARTS NO.	PARTS NAME		REMARKS
	R209	QRD161J-473	CARBON RESISTOR		47K 5% 1/6W
	R210	QRD161J-104	CARBON RESISTOR		100K 5% 1/6W
	R213	QRD161J-681	CARBON RESISTOR		680 5% 1/6W
	R214	QRD161J-823	CARBON RESISTOR		82K 5% 1/6W
	R215	QRD161J-154	CARBON RESISTOR		150K 5% 1/6W
	R216	QRD161J-102	CARBON RESISTOR		1.0K 5% 1/6W
	R217	QRD161J-121	CARBON RESISTOR		120 5% 1/6W
	R218	QRD161J-221	CARBON RESISTOR		220 5% 1/6W
	R219	QRD161J-473	CARBON RESISTOR		47K 5% 1/6W
	R220	QRD161J-223	CARBON RESISTOR		22K 5% 1/6W
	R221	QRD161J-682	CARBON RESISTOR		6.8K 5% 1/6W
	R222	QRD161J-123	CARBON RESISTOR		12K 5% 1/6W
	R223	QRD161J-154	CARBON RESISTOR		150K 5% 1/6W
	R224	QRD161J-822	CARBON RESISTOR		8.2K 5% 1/6W
	R225	QRD161J-683	CARBON RESISTOR		68K 5% 1/6W
	R301	QRD161J-102	CARBON RESISTOR		1.0K 5% 1/6W
	R302	QRD161J-104	CARBON RESISTOR		100K 5% 1/6W
	R303	QRD161J-103	CARBON RESISTOR		10K 5% 1/6W
	R304	QRD161J-103	CARBON RESISTOR		10K 5% 1/6W
	R305	QRD161J-102	CARBON RESISTOR		1.0K 5% 1/6W
	R306	QRD161J-101	CARBON RESISTOR		100 5% 1/6W
	R307	QRD161J-102	CARBON RESISTOR		1.0K 5% 1/6W
	R308	QRD161J-475	CARBON RESISTOR		4.7M 5% 1/6W
	R309	QRD161J-475	CARBON RESISTOR		4.7M 5% 1/6W
	R310	QRD143J-820S	CARBON RESISTOR		82 5% 1/4W
	R311	QRD161J-273	CARBON RESISTOR		27K 5% 1/6W
	R312	QRD161J-2R2	CARBON RESISTOR		2.2 5% 1/6W
	R313	QRD161J-101	CARBON RESISTOR		100 5% 1/6W
	R314	QRD161J-183	CARBON RESISTOR		18K 5% 1/6W
	R315	QRD161J-471	CARBON RESISTOR		470 5% 1/6W
	R316	QRD161J-183	CARBON RESISTOR		18K 5% 1/6W
	R317	QRD161J-183	CARBON RESISTOR		18K 5% 1/6W
	R318	QRD161J-103	CARBON RESISTOR		10K 5% 1/6W
	R319	QRD161J-154	CARBON RESISTOR		150K 5% 1/6W
	R320	QRD161J-104	CARBON RESISTOR		100K 5% 1/6W
	R321	QRD161J-472	CARBON RESISTOR		4.7K 5% 1/6W
	R322	QRD161J-472	CARBON RESISTOR		4.7K 5% 1/6W
	R323	QRD161J-222	CARBON RESISTOR		2.2K 5% 1/6W
	R324	QRD161J-223	CARBON RESISTOR		22K 5% 1/6W
	R325	QRD161J-223	CARBON RESISTOR		22K 5% 1/6W
	R326	QRD161J-472	CARBON RESISTOR		4.7K 5% 1/6W
	R327	QRD161J-102	CARBON RESISTOR		1.0K 5% 1/6W
	R328	QRD161J-472	CARBON RESISTOR		4.7K 5% 1/6W
	R329	QRD161J-472	CARBON RESISTOR		4.7K 5% 1/6W
	R332	QRD161J-105	CARBON RESISTOR		1.0M 5% 1/6W
	R333	QRD161J-471	CARBON RESISTOR		470 5% 1/6W
	R334	QRD161J-153	CARBON RESISTOR		15K 5% 1/6W
	R335	QRD161J-223	CARBON RESISTOR		22K 5% 1/6W
	R338	QRD161J-153	CARBON RESISTOR		15K 5% 1/6W
	R339	QRD161J-392	CARBON RESISTOR		3.9K 5% 1/6W

⚠	REF.	PARTS NO.	PARTS NAME		REMARKS
	R340	QRD161J-182	CARBON RESISTOR		1.8K 5% 1/6W
	R341	QRD161J-332	CARBON RESISTOR		3.3K 5% 1/6W
	S301	QSS1G62-V01	SLIDE SWITCH		
	VR101	QVZ3523-103AZ	V RESISTOR		
	VR102	QVZ3523-103AZ	V RESISTOR		
	VR103	QVZ3523-103AZ	V RESISTOR		
	VR104	QVZ3523-104AZ	SEMI.V.RESISTOR		
	VR201	QVZ3523-103AZ	V RESISTOR		
	VR202	QVZ3523-103AZ	V RESISTOR		
	VR203	QVZ3523-103AZ	V RESISTOR		
	VR204	QVZ3523-104AZ	SEMI.V.RESISTOR		
	VR301	QVZ3523-202AZ	V RESISTOR		

⚠ parts are safety assurance parts.

■ Function Board Parts List: VMW1224

When replacing those parts, make sure to use the specified one.

⚠	REF.	PARTS NO.	PARTS NAME		REMARKS
	CL101	QETC1HM-474ZN	E.CAPACITOR		.47MF 20% 50V
	CL103	QETC1EM-106ZN	E.CAPACITOR		10MF 20% 25V
	CL201	QETC1HM-474ZN	E.CAPACITOR		.47MF 20% 50V
	CL203	QETC1EM-106ZN	E.CAPACITOR		10MF 20% 25V
	CL301	QETC1AM-476ZN	E.CAPACITOR		47MF 20% 10V
	CL304	QETC1CM-106ZN	E.CAPACITOR		10MF 20% 16V
	CL305	QETC1AM-476ZN	E.CAPACITOR		47MF 20% 10V
	CL306	QFN41HJ-152	M.CAPACITOR		1500PF 5% 50V
	CL307	QFN41HJ-332	M.CAPACITOR		3300PF 5% 50V
	CL308	QFN41HJ-332	M.CAPACITOR		3300PF 5% 50V
	CL309	QFN41HJ-152	M.CAPACITOR		1500PF 5% 50V
	CL310	QETC1HM-335ZN	E.CAPACITOR		3.3MF 20% 50V
	CN351	E04365-012S	CONNECTOR		
	CN352	E04365-007S	***CONNECTOR		
	CN353	E04365-006S	CONNECTOR		
	CN354	E04365-006S	CONNECTOR		
	CN355	E04365-008S	CONNECTOR		
	CN356	E04365-005S	CONNECTOR		
	CN357	VMC0155-010	CONNECTOR		
	CN358	E04365-009S	CONNECTOR		
	CN359	E04365-007S	***CONNECTOR		
	CN361	VMC0155-010	CONNECTOR		
	CN362	VMC0063-009	CONNECTOR		
	CN363	E04365-004S	CONNECTOR		
	CP11	QETC1HM-335ZN	E.CAPACITOR		3.3MF 20% 50V
	CP12	QCBB1HK-471Y	C.CAPACITOR		470PF 10% 50V
	CP13	QCBB1HK-102Y	C.CAPACITOR		1000PF 10% 50V
	CP14	QFN41HJ-822	M.CAPACITOR		8200PF 5% 50V
	CP15	QFV71HJ-273ZM	TF.CAPACITOR		.027MF 5% 50V
	CP16	QETC1HM-474ZN	E.CAPACITOR		.47MF 20% 50V

⚠	REF.	PARTS NO.	PARTS NAME		REMARKS
	CP17	QETC1CM-226ZN	E.CAPACITOR		22MF 20% 16V
	CP21	QETC1HM-335ZN	E.CAPACITOR		3.3MF 20% 50V
	CP22	QCBB1HK-471Y	C.CAPACITOR		470PF 10% 50V
	CP23	QCBB1HK-102Y	C.CAPACITOR		1000PF 10% 50V
	CP24	QFN41HJ-822	M.CAPACITOR		8200PF 5% 50V
	CP25	QFV71HJ-273ZM	TF.CAPACITOR		.027MF 5% 50V
	CP26	QETC1HM-474ZN	E.CAPACITOR		.47MF 20% 50V
	CP27	QETC1CM-226ZN	E.CAPACITOR		22MF 20% 16V
	CP31	QETC1CM-106ZN	E.CAPACITOR		10MF 20% 16V
	CP32	QETC1AM-476ZN	E.CAPACITOR		47MF 20% 10V
	C151	QETC1HM-335ZN	E.CAPACITOR		3.3MF 20% 50V
	C152	QETC1HM-474ZN	E.CAPACITOR		.47MF 20% 50V
	C153	QETC1AM-107ZN	E.CAPACITOR		100MF 20% 10V
	C154	QCBB1HK-331Y	C.CAPACITOR		330PF 10% 50V
	C251	QETC1HM-335ZN	E.CAPACITOR		3.3MF 20% 50V
	C252	QETC1HM-474ZN	E.CAPACITOR		.47MF 20% 50V
	C253	QETC1AM-107ZN	E.CAPACITOR		100MF 20% 10V
	C254	QCBB1HK-331Y	C.CAPACITOR		330PF 10% 50V
	C351	QETC1AM-476ZN	E.CAPACITOR		47MF 20% 10V
	C352	QETC1AM-476ZN	E.CAPACITOR		47MF 20% 10V
	C353	QETC1CM-106ZN	E.CAPACITOR		10MF 20% 16V
	C354	QCVB1CM-103Y	C.CAPACITOR		.010MF 20% 16V
	C355	QETC1AM-476ZN	E.CAPACITOR		47MF 20% 10V
	C356	QETC1AM-477ZN	E.CAPACITOR		470MF 20% 10V
	C357	QETC1AM-476ZN	E.CAPACITOR		47MF 20% 10V
	C358	QETC1EM-475ZN	E.CAPACITOR		4.7MF 20% 25V
	C359	QETC1AM-476ZN	E.CAPACITOR		47MF 20% 10V
	C360	QETC1HM-225ZN	E.CAPACITOR		2.2MF 20% 50V
	C361	QETC1CM-226ZN	E.CAPACITOR		22MF 20% 16V
	C362	QETC1CM-226ZN	E.CAPACITOR		22MF 20% 16V
	C363	QCS11HJ-221	C.CAPACITOR		220PF 5% 50V
	C365	QFV41HJ-123	TF CAPACITOR		.012MF 5% 50V
	C366	QCXB1CM-152Y	C.CAPACITOR		1500PF 20% 16V
	C367	QETC1CM-106ZN	E.CAPACITOR		10MF 20% 16V
	C368	QETC1AM-476ZN	E.CAPACITOR		47MF 20% 10V
	C369	QETC1AM-476ZN	E.CAPACITOR		47MF 20% 10V
	C401	QCS11HJ-240	C.CAPACITOR		24PF 5% 50V
	C402	QCS11HJ-240	C.CAPACITOR		24PF 5% 50V
	C403	QETC1AM-107ZN	E.CAPACITOR		100MF 20% 10V
	C404	QCBB1HK-102Y	C.CAPACITOR		1000PF 10% 50V
	C406	QCBB1HK-102Y	C.CAPACITOR		1000PF 10% 50V
	C407	QCBB1HK-102Y	C.CAPACITOR		1000PF 10% 50V
	C408	QCBB1HK-102Y	C.CAPACITOR		1000PF 10% 50V
	C409	QCBB1HK-151Y	C.CAPACITOR		150PF 10% 50V
	C410	QCBB1HK-102Y	C.CAPACITOR		1000PF 10% 50V
	C411	QCC11EM-473	C.CAPACITOR		.047MF 20% 25V
	C412	QETB1HM-335N	E.CAPACITOR		3.3MF 20% 50V
	C413	QCVB1CM-103Y	C.CAPACITOR		.010MF 20% 16V
	C414	QETB1HM-105N	E.CAPACITOR		1.0MF 20% 50V
	C415	QCS11HJ-470	C CAPACITOR		47PF 5% 50V

⚠	REF.	PARTS NO.	PARTS NAME		REMARKS
	C416	QCBB1HK-151Y	C.CAPACITOR		150PF 10% 50V
	C417	QCY41HK-102	C.CAPACITOR		1000PF 10% 50V
	D351	MA4062(H)TA	Z DIODE		
	D352	HSS104TJ	SI DIODE		
	D353	MA4056(H)	Z DIODE		
	D354	HSS104TJ	SI DIODE		
	D355	HSS104TJ	SI DIODE		
	D356	HSS104TJ	SI DIODE		
	D357	MA700	ZENER DIODE		
	D358	MA700	ZENER DIODE		
	D359	HSS104TJ	SI DIODE		
	D360	HSS104TJ	SI DIODE		
	D361	HSS104TJ	SI DIODE		
	D362	HSS104TJ	SI DIODE		
	D401	MA165	SI.DIODE		
	D402	MA165	SI.DIODE		
	D403	MA165	SI.DIODE		
	D404	MA165	SI.DIODE		
	D405	MA700	ZENER DIODE		
	D406	MA165	SI.DIODE		
	ICL01	VUC2003-001	IC		
	ICP31	BA328	I.C.		
	IC351	BA15218N	IC		
	IC352	M5216L	IC		
	IC353	BA15218N	IC		
	IC354	BA15218N	IC		
	IC401	TMP47C200AN2324	CPU		
	IC402	MN1280(S)	IC		
	IC403	BA6208A	I C		
	JP31	EMN00TV-402A	PIN JACK		
	JP32	VMZ0001-001	TERMINAL		
	L351	EQF0101-002	FILTER		
	L401	VQP0018-5R6	INDUCTOR		
	L402	VQP025K-5R6	INDUCTOR		
	L403	VQP025K-5R6	INDUCTOR		
	L404	VQP025K-5R6	INDUCTOR		
	L405	VQP0018-221	INDUCTOR		
	L406	T41572-001	CHOKE COIL		
	L407	T41572-001	CHOKE COIL		
	QL101	2SC2785	TRANSISTOR		
	QL201	2SC2785	TRANSISTOR		
	Q151	2SC1740S(RS)	TRANSISTOR		
	Q152	2SD1302(S,T)	TR.I M		
	Q153	2SD1302(S,T)	TR.I M		
	Q154	2SD1302(S,T)	TR.I M		
	Q155	2SD1302(S,T)	TR.I M		
	Q156	2SD1302(S,T)	TR.I M		
	Q157	2SD1302(S,T)	TR.I M		
	Q251	2SC1740S(RS)	TRANSISTOR		
	Q252	2SD1302(S,T)	TR.I M		

⚠	REF.	PARTS NO.	PARTS NAME		REMARKS
	Q253	2SD1302(S,T)	TR.I M		
	Q254	2SD1302(S,T)	TR.I M		
	Q255	2SD1302(S,T)	TR.I M		
	Q256	2SD1302(S,T)	TR.I M		
	Q257	2SD1302(S,T)	TR.I M		
	Q351	2SD1302(S,T)TA	TR.I M		
	Q352	2SC2785	TRANSISTOR		
	Q353	2SC2785	TRANSISTOR		
	Q354	2SA1317	TRANSISTOR		
	Q355	2SC2785	TRANSISTOR		
	Q356	UN4213	TRANSISTOR		
	Q401	2SC1740S(RS)	TRANSISTOR		
	Q402	2SC1740S(RS)	TRANSISTOR		
	Q403	2SC1740S(RS)	TRANSISTOR		
	Q404	2SC945	TRANSISTOR		
	RL101	QRD161J-103	CARBON RESISTOR		10K 5% 1/6W
	RL102	QRD161J-102	CARBON RESISTOR		1.0K 5% 1/6W
	RL103	QRD161J-222	CARBON RESISTOR		2.2K 5% 1/6W
	RL201	QRD161J-103	CARBON RESISTOR		10K 5% 1/6W
	RL202	QRD161J-102	CARBON RESISTOR		1.0K 5% 1/6W
	RL203	QRD161J-222	CARBON RESISTOR		2.2K 5% 1/6W
	RL301	QRD161J-221	CARBON RESISTOR		220 5% 1/6W
	RL302	QRD161J-103	CARBON RESISTOR		10K 5% 1/6W
	RL303	QRD161J-472	CARBON RESISTOR		4.7K 5% 1/6W
	RL304	QRD161J-223	CARBON RESISTOR		22K 5% 1/6W
	RL305	QRD161J-223	CARBON RESISTOR		22K 5% 1/6W
	RL306	QRD161J-473	CARBON RESISTOR		47K 5% 1/6W
	RP101	QRD161J-182	CARBON RESISTOR		1.8K 5% 1/6W
	RP102	QRD161J-473	CARBON RESISTOR		47K 5% 1/6W
	RP103	QRD161J-561	CARBON RESISTOR		560 5% 1/6W
	RP104	QRD161J-103	CARBON RESISTOR		10K 5% 1/6W
	RP105	QRD161J-124	CARBON RESISTOR		120K 5% 1/6W
	RP106	QRD161J-332	CARBON RESISTOR		3.3K 5% 1/6W
	RP201	QRD161J-182	CARBON RESISTOR		1.8K 5% 1/6W
	RP202	QRD161J-473	CARBON RESISTOR		47K 5% 1/6W
	RP203	QRD161J-561	CARBON RESISTOR		560 5% 1/6W
	RP204	QRD161J-103	CARBON RESISTOR		10K 5% 1/6W
	RP205	QRD161J-124	CARBON RESISTOR		120K 5% 1/6W
	RP206	QRD161J-332	CARBON RESISTOR		3.3K 5% 1/6W
	RP32	QRD161J-331	CARBON RESISTOE		330 5% 1/6W
	R151	QRD161J-123	CARBON RESISTOR		12K 5% 1/6W
	R152	QRD161J-103	CARBON RESISTOR		10K 5% 1/6W
	R153	QRD161J-682	CARBON RESISTOR		6.8K 5% 1/6W
	R154	QRD161J-103	CARBON RESISTOR		10K 5% 1/6W
	R155	QRD161J-332	CARBON RESISTOR		3.3K 5% 1/6W
	R156	QRD161J-473	CARBON RESISTOR		47K 5% 1/6W
	R157	QRD161J-472	CARBON RESISTOR		4.7K 5% 1/6W
	R158	QRD161J-472	CARBON RESISTOR		4.7K 5% 1/6W
	R159	QRD161J-472	CARBON RESISTOR		4.7K 5% 1/6W
	R160	QRD161J-472	CARBON RESISTOR		4.7K 5% 1/6W

⚠	REF.	PARTS NO.	PARTS NAME		REMARKS
	R161	QRD161J-472	CARBON RESISTOR		4.7K 5% 1/6W
	R162	QRD161J-223	CARBON RESISTOR		22K 5% 1/6W
	R163	QRD161J-223	CARBON RESISTOR		22K 5% 1/6W
	R164	QRD161J-564	CARBON RESISTOR		560K 5% 1/6W
	R165	QRD161J-393	CARBON RESISTOR		39K 5% 1/6W
	R166	QRD161J-330	CARBON RESISTOR		33 5% 1/6W
	R167	QRD161J-472	CARBON RESISTOR		4.7K 5% 1/6W
	R168	QRD161J-102	CARBON RESISTOR		1.0K 5% 1/6W
	R169	QRD161J-563	CARBON RESISTOR		56K 5% 1/6W
	R170	QRD161J-333	CARBON RESISTOR		33K 5% 1/6W
	R171	QRD161J-471	CARBON RESISTOR		470 5% 1/6W
	R172	QRD161J-683	CARBON RESISTOR		68K 5% 1/6W
	R251	QRD161J-123	CARBON RESISTOR		12K 5% 1/6W
	R252	QRD161J-103	CARBON RESISTOR		10K 5% 1/6W
	R253	QRD161J-682	CARBON RESISTOR		6.8K 5% 1/6W
	R254	QRD161J-103	CARBON RESISTOR		10K 5% 1/6W
	R255	QRD161J-332	CARBON RESISTOR		3.3K 5% 1/6W
	R256	QRD161J-473	CARBON RESISTOR		47K 5% 1/6W
	R257	QRD161J-472	CARBON RESISTOR		4.7K 5% 1/6W
	R258	QRD161J-472	CARBON RESISTOR		4.7K 5% 1/6W
	R259	QRD161J-472	CARBON RESISTOR		4.7K 5% 1/6W
	R260	QRD161J-472	CARBON RESISTOR		4.7K 5% 1/6W
	R261	QRD161J-472	CARBON RESISTOR		4.7K 5% 1/6W
	R262	QRD161J-223	CARBON RESISTOR		22K 5% 1/6W
	R263	QRD161J-223	CARBON RESISTOR		22K 5% 1/6W
	R264	QRD161J-564	CARBON RESISTOR		560K 5% 1/6W
	R265	QRD161J-393	CARBON RESISTOR		39K 5% 1/6W
	R266	QRD161J-330	CARBON RESISTOR		33 5% 1/6W
	R267	QRD161J-472	CARBON RESISTOR		4.7K 5% 1/6W
	R268	QRD161J-102	CARBON RESISTOR		1.0K 5% 1/6W
	R269	QRD161J-563	CARBON RESISTOR		56K 5% 1/6W
	R270	QRD161J-333	CARBON RESISTOR		33K 5% 1/6W
	R271	QRD161J-471	CARBON RESISTOR		470 5% 1/6W
	R272	QRD161J-683	CARBON RESISTOR		68K 5% 1/6W
	R3A0	QRD161J-331	CARBON RESISTOE		330 5% 1/6W
	R3A1	QRD161J-122	CARBON RESISTOR		1.2K 5% 1/6W
	R3A2	QRD161J-122	CARBON RESISTOR		1.2K 5% 1/6W
	R352	QRZ0077-4R7)	F.RES.I.M		4.7 1/0W
	R353	QRD161J-331	CARBON RESISTOE		330 5% 1/6W
	R354	QRD161J-101	CARBON RESISTOR		100 5% 1/6W
	R355	QRD161J-223	CARBON RESISTOR		22K 5% 1/6W
	R356	QRD161J-223	CARBON RESISTOR		22K 5% 1/6W
	R357	QRD161J-223	CARBON RESISTOR		22K 5% 1/6W
	R358	QRD161J-473	CARBON RESISTOR		47K 5% 1/6W
	R359	QRD161J-102	CARBON RESISTOR		1.0K 5% 1/6W
	R360	QRD161J-102	CARBON RESISTOR		1.0K 5% 1/6W
	R361	QRD161J-102	CARBON RESISTOR		1.0K 5% 1/6W
	R362	QRD161J-102	CARBON RESISTOR		1.0K 5% 1/6W
	R363	QRZ0076-4R7	C RESISTOR		4.7 1/0W
	R364	QRD161J-102	CARBON RESISTOR		1.0K 5% 1/6W

⚠	REF.	PARTS NO.	PARTS NAME		REMARKS
	R365	QRD161J-123	CARBON RESISTOR		12K 5% 1/6W
	R366	QRD161J-104	CARBON RESISTOR		100K 5% 1/6W
	R367	QRD161J-104	CARBON RESISTOR		100K 5% 1/6W
	R368	QRD161J-104	CARBON RESISTOR		100K 5% 1/6W
	R369	QRD161J-393	CARBON RESISTOR		39K 5% 1/6W
	R370	QRD161J-154	CARBON RESISTOR		150K 5% 1/6W
	R371	QRD161J-154	CARBON RESISTOR		150K 5% 1/6W
	R372	QRD161J-683	CARBON RESISTOR		68K 5% 1/6W
	R373	QRD161J-562	CARBON RESISTOR		5.6K 5% 1/6W
	R374	QRD161J-562	CARBON RESISTOR		5.6K 5% 1/6W
	R376	QRD161J-393	CARBON RESISTOR		39K 5% 1/6W
	R377	QRD161J-561	CARBON RESISTOR		560 5% 1/6W
	R378	QRD161J-102	CARBON RESISTOR		1.0K 5% 1/6W
	R379	QRD161J-103	CARBON RESISTOR		10K 5% 1/6W
	R380	QRD161J-393	CARBON RESISTOR		39K 5% 1/6W
	R381	QRD161J-103	CARBON RESISTOR		10K 5% 1/6W
	R382	QRD161J-222	CARBON RESISTOR		2.2K 5% 1/6W
	R383	QRD161J-222	CARBON RESISTOR		2.2K 5% 1/6W
	R384	QRD161J-103	CARBON RESISTOR		10K 5% 1/6W
	R385	QRD161J-103	CARBON RESISTOR		10K 5% 1/6W
	R387	QRD161J-103	CARBON RESISTOR		10K 5% 1/6W
	R388	QRD161J-223	CARBON RESISTOR		22K 5% 1/6W
	R389	QRD161J-472	CARBON RESISTOR		4.7K 5% 1/6W
	R390	QRD161J-472	CARBON RESISTOR		4.7K 5% 1/6W
	R391	QRD161J-473	CARBON RESISTOR		47K 5% 1/6W
	R392	QRD161J-222	CARBON RESISTOR		2.2K 5% 1/6W
	R393	QRD161J-472	CARBON RESISTOR		4.7K 5% 1/6W
	R394	QRD161J-221	CARBON RESISTOR		220 5% 1/6W
	R395	QRD161J-103	CARBON RESISTOR		10K 5% 1/6W
	R396	QRD161J-432Y	C RESISTOR		4.3K 5% 1/6W
	R397	QRD161J-101	CARBON RESISTOR		100 5% 1/6W
	R398	QRD161J-333	CARBON RESISTOR		33K 5% 1/6W
	R399	QRD161J-273	CARBON RESISTOR		27K 5% 1/6W
	R402	QRD161J-102	CARBON RESISTOR		1.0K 5% 1/6W
	R403	QRD161J-102	CARBON RESISTOR		1.0K 5% 1/6W
	R404	QRD161J-102	CARBON RESISTOR		1.0K 5% 1/6W
	R405	QRD161J-103	CARBON RESISTOR		10K 5% 1/6W
	R406	QRD161J-103	CARBON RESISTOR		10K 5% 1/6W
	R407	QRD161J-103	CARBON RESISTOR		10K 5% 1/6W
	R408	QRD161J-103	CARBON RESISTOR		10K 5% 1/6W
	R409	QRD161J-103	CARBON RESISTOR		10K 5% 1/6W
	R410	QRD161J-103	CARBON RESISTOR		10K 5% 1/6W
	R411	QRD161J-103	CARBON RESISTOR		10K 5% 1/6W
	R412	QRD161J-473	CARBON RESISTOR		47K 5% 1/6W
	R413	QRD161J-102	CARBON RESISTOR		1.0K 5% 1/6W
	R414	QRD161J-102	CARBON RESISTOR		1.0K 5% 1/6W
	R415	QRD161J-563	CARBON RESISTOR		56K 5% 1/6W
	R416	QRD161J-333	CARBON RESISTOR		33K 5% 1/6W
	R417	QRD161J-471	CARBON RESISTOR		470 5% 1/6W
	R418	QRD161J-331	CARBON RESISTOE		330 5% 1/6W

⚠	REF.	PARTS NO.	PARTS NAME		REMARKS
	R419	QRD161J-334	CARBON RESISTOR		330K 5% 1/6W
	R420	QRD161J-222	CARBON RESISTOR		2.2K 5% 1/6W
	R421	QRD161J-222	CARBON RESISTOR		2.2K 5% 1/6W
	R422	QRD161J-391	CARBON RESISTOR		390 5% 1/6W
	R423	QRD161J-473	CARBON RESISTOR		47K 5% 1/6W
	R424	QRD161J-472	CARBON RESISTOR		4.7K 5% 1/6W
	R425	QRD161J-273	CARBON RESISTOR		27K 5% 1/6W
	X401	CSA3.00MG	CERA LOCK		

■ SEA/Function Switch Board
Parts List: VMW1225

⚠ parts are safety assurance parts.
When replacing those parts, make sure to use the specified one.

⚠	REF.	PARTS NO.	PARTS NAME		REMARKS
	CG101	QCBB1HK-151Y	C.CAPACITOR		150PF 10% 50V
	CG102	QETC1EM-475ZN	E.CAPACITOR		4.7MF 20% 25V
	CG103	QCC11EM-683	C.CAPACITOR		.068MF 20% 25V
	CG104	QETC1HM-225ZN	E.CAPACITOR		2.2MF 20% 50V
	CG105	QCC11EM-153	C.CAPACITOR		.015MF 20% 25V
	CG106	QETC1HM-474ZN	E.CAPACITOR		.47MF 20% 50V
	CG107	QCXB1CM-392Y	C.CAPACITOR		3900PF 20% 16V
	CG108	QCC11EM-104	C.CAPACITOR		.10MF 20% 25V
	CG109	QCBB1HK-821Y	C.CAPACITOR		820PF 10% 50V
	CG110	QCC11EM-333	C.CAPACITOR		.033MF 20% 25V
	CG111	QCC11EM-123	C.CAPACITOR		.012MF 20% 25V
	CG112	QETC1EM-475ZN	E.CAPACITOR		4.7MF 20% 25V
	CG113	QETC1EM-475ZN	E.CAPACITOR		4.7MF 20% 25V
	CG114	QETC1HM-225ZN	E.CAPACITOR		2.2MF 20% 50V
	CG115	QCS11HJ-470	C CAPACITOR		47PF 5% 50V
	CG116	QCY41HK-102	C.CAPACITOR		1000PF 10% 50V
	CG201	QCBB1HK-151Y	C.CAPACITOR		150PF 10% 50V
	CG202	QETC1EM-475ZN	E.CAPACITOR		4.7MF 20% 25V
	CG203	QCC11EM-683	C.CAPACITOR		.068MF 20% 25V
	CG204	QETC1HM-225ZN	E.CAPACITOR		2.2MF 20% 50V
	CG205	QCC11EM-153	C.CAPACITOR		.015MF 20% 25V
	CG206	QETC1HM-474ZN	E.CAPACITOR		.47MF 20% 50V
	CG207	QCXB1CM-392Y	C.CAPACITOR		3900PF 20% 16V
	CG208	QCC11EM-104	C.CAPACITOR		.10MF 20% 25V
	CG209	QCBB1HK-821Y	C.CAPACITOR		820PF 10% 50V
	CG210	QCC11EM-333	C.CAPACITOR		.033MF 20% 25V
	CG211	QCC11EM-123	C.CAPACITOR		.012MF 20% 25V
	CG212	QETC1EM-475ZN	E.CAPACITOR		4.7MF 20% 25V
	CG213	QETC1EM-475ZN	E.CAPACITOR		4.7MF 20% 25V
	CG214	QETC1HM-225ZN	E.CAPACITOR		2.2MF 20% 50V
	CG215	QCS11HJ-470	C CAPACITOR		47PF 5% 50V
	CG216	QCY41HK-102	C.CAPACITOR		1000PF 10% 50V
	CG301	QETC1AM-227ZN	E CAPACITOR		220MF 20% 10V
	CG302	QETC1AM-476ZN	E.CAPACITOR		47MF 20% 10V
	CG303	QETC1AM-476ZN	E.CAPACITOR		47MF 20% 10V

⚠	REF.	PARTS NO.	PARTS NAME		REMARKS
	DF301	GL8HD22	LED		
	DF302	GL8HD22	LED		
	DF303	MA165	SI.DIODE		
	DF304	MA165	SI.DIODE		
	D363	MA723-TA	SI DIODE		
	ICG31	BA3823LS	IC		
	ICG32	BA15218N	IC		
	PLF01	VGZ0001-028V	P.LAMP		
	RF302	QRD161J-391	CARBON RESISTOR		390 5% 1/6W
	RF303	QRD161J-222	CARBON RESISTOR		2.2K 5% 1/6W
	RF306	QRD161J-222	CARBON RESISTOR		2.2K 5% 1/6W
	RF307	QRD161J-222	CARBON RESISTOR		2.2K 5% 1/6W
	RF308	QRD161J-222	CARBON RESISTOR		2.2K 5% 1/6W
	RF309	QRD161J-222	CARBON RESISTOR		2.2K 5% 1/6W
	RF310	QRD161J-103	CARBON RESISTOR		10K 5% 1/6W
	RG101	QRD161J-681	CARBON RESISTOR		680 5% 1/6W
	RG102	QRD161J-124	CARBON RESISTOR		120K 5% 1/6W
	RG103	QRD161J-473	CARBON RESISTOR		47K 5% 1/6W
	RG104	QRD161J-473	CARBON RESISTOR		47K 5% 1/6W
	RG201	QRD161J-681	CARBON RESISTOR		680 5% 1/6W
	RG202	QRD161J-124	CARBON RESISTOR		120K 5% 1/6W
	RG203	QRD161J-473	CARBON RESISTOR		47K 5% 1/6W
	RG204	QRD161J-473	CARBON RESISTOR		47K 5% 1/6W
	RG301	QRD161J-221	CARBON RESISTOR		220 5% 1/6W
	RG302	QRD161J-221	CARBON RESISTOR		220 5% 1/6W
	RG303	QRD161J-822	CARBON RESISTOR		8.2K 5% 1/6W
	RG304	QRD161J-103	CARBON RESISTOR		10K 5% 1/6W
	R105	QRD161J-681	CARBON RESISTOR		680 5% 1/6W
	SF301	QSP4H11-V06Z	TACT SW		
	SF302	QSP4H11-V06Z	TACT SW		
	SF303	QSP4H11-V06Z	TACT SW		
	SF304	VST0025-001M	4KEY PUSH SW		
	SF307	VST0025-001M	4KEY PUSH SW		
	SF308	QSP2256-001	P.SWITCH		
	SF309	QSP2256-001	P.SWITCH		
	SF310	QSP2256-001	P.SWITCH		
	VRG31	QVXB1JG-V15	V.RESISTOR		
	VRG32	QVXB1JG-V15	V.RESISTOR		
	VRG33	QVXB1JG-V15	V.RESISTOR		
	VRG34	QVXB1JG-V15	V.RESISTOR		
	VRG35	QVXB1JG-V15	V.RESISTOR		

■ Power Amplifier Board Parts List: VMW1223

⚠ parts are safety assurance parts.
When replacing those parts, make sure to use the specified one.

⚠	REF.	PARTS NO.	PARTS NAME		REMARKS
	CA01	QETC1HM-105ZN	E.CAPACITOR		1.0MF 20% 50V
	CA02	QETC1EM-476ZN	E.CAPACITOR		47MF 20% 25V
	CA03	QCXB1CM-332Y	C.CAPACITOR		3300PF 20% 16V
	CA04	QCC11EM-104	C.CAPACITOR		.10MF 20% 25V
	CA05	QETB1EM-477	E CAPACITOR		470MF 20% 25V
	CB01	QETC1HM-105ZN	E.CAPACITOR		1.0MF 20% 50V
	CB02	QETC1EM-476ZN	E.CAPACITOR		47MF 20% 25V
	CB03	QCXB1CM-332Y	C.CAPACITOR		3300PF 20% 16V
	CB04	QCC11EM-104	C.CAPACITOR		.10MF 20% 25V
	CB05	QETB1EM-477	E CAPACITOR		470MF 20% 25V
	CC01	QETC1EM-476ZN	E.CAPACITOR		47MF 20% 25V
	CC02	QETC1EM-106ZN	E.CAPACITOR		10MF 20% 25V
	CC11	QETC1HM-475ZN	E.CAPACITOR		4.7MF 20% 50V
	CC12	QETC1HM-475ZN	E.CAPACITOR		4.7MF 20% 50V
	CC13	QETC1EM-476ZN	E.CAPACITOR		47MF 20% 25V
	CC14	QCVB1CM-103Y	C.CAPACITOR		.010MF 20% 16V
	CC15	QCVB1CM-103Y	C.CAPACITOR		.010MF 20% 16V
	CC16	QETC1EM-476ZN	E.CAPACITOR		47MF 20% 25V
	CC17	QETC1EM-227ZN	E CAPACITOR		220MF 20% 25V
	CC18	QCC11EM-104	C.CAPACITOR		.10MF 20% 25V
	CC19	QETC1EM-106ZN	E.CAPACITOR		10MF 20% 25V
⚠	CC20	QETB1VM-338N	E.CAPACITOR		3300MF 20% 35V
	CC22	QCC11EM-104	C.CAPACITOR		.10MF 20% 25V
⚠	CNC01	VMC0155-002	CONNECTOR		
	C953	QCC11EM-683	C.CAPACITOR		.068MF 20% 25V
	C954	QCBB1HK-331Y	C.CAPACITOR		330PF 10% 50V
	C955	QCVB1CM-103Y	C.CAPACITOR		.010MF 20% 16V
	C956	QCC11EM-683	C.CAPACITOR		.068MF 20% 25V
	C957	QCBB1HK-102Y	C.CAPACITOR		1000PF 10% 50V
	C958	QCVB1CM-103Y	C.CAPACITOR		.010MF 20% 16V
	C959	QCC11EM-683	C.CAPACITOR		.068MF 20% 25V
	C960	QCC11EM-683	C.CAPACITOR		.068MF 20% 25V
	C961	QCBB1HK-102Y	C.CAPACITOR		1000PF 10% 50V
	C962	QCVB1CM-103Y	C.CAPACITOR		.010MF 20% 16V
	C964	QETC1AM-476ZN	E.CAPACITOR		47MF 20% 10V
	C965	QETC1AM-107ZN	E.CAPACITOR		100MF 20% 10V
	C966	QETC1AM-227ZN	E CAPACITOR		220MF 20% 10V
	C967	QETC1AM-107ZN	E.CAPACITOR		100MF 20% 10V
⚠	C968	QETB1EM-338N	E.CAPACITOR		3300MF 20% 25V
	D951	HSS104TJ	SI DIODE		
	D952	MA4082(H)	Z DIODE		
	D953	HSS104TJ	SI DIODE		
	D955	HSS104TJ	SI DIODE		
	D956	MA4075(M)	DIODE		
	D958	HSS104TJ	SI DIODE		
	D959	MA4047(M)	Z DIODE		
	D960	11E1	SI.DIODE		
⚠	ICC01	TA8216H(JVC)	IC		
⚠	ICC11	TA8216H(JVC)	IC		
	JC01	EMB90YV-401A	SPK.TERMINAL		

⚠	REF.	PARTS NO.	PARTS NAME		REMARKS
	QC01	2SD1302(S,T)	TR.I M		
⚠	Q951	2SB941(P)	TRANSISTOR		
	Q952	2SC2785	TRANSISTOR		
	Q953	2SC2785	TRANSISTOR		
	Q954	2SC2785	TRANSISTOR		
⚠	Q955	2SB941(P)	TRANSISTOR		
	Q956	2SC2785	TRANSISTOR		
	Q957	2SC2785	TRANSISTOR		
	Q958	2SC2785	TRANSISTOR		
⚠	Q959	2SA1359(OY)	T.R		
	Q960	2SC2785	TRANSISTOR		
	Q961	2SC2785	TRANSISTOR		
	Q965	2SA1317	TRANSISTOR		
	RA01	QRD161J-2R2	CARBON RESISTOR		2.2 5% 1/6W
	RA02	QRD161J-471	CARBON RESISTOR		470 5% 1/6W
	RB01	QRD161J-2R2	CARBON RESISTOR		2.2 5% 1/6W
	RB02	QRD161J-471	CARBON RESISTOR		470 5% 1/6W
	RC01	QRD161J-562	CARBON RESISTOR		5.6K 5% 1/6W
	RC11	QRD161J-472	CARBON RESISTOR		4.7K 5% 1/6W
	RC12	QRD161J-104	CARBON RESISTOR		100K 5% 1/6W
	RC13	QRD161J-472	CARBON RESISTOR		4.7K 5% 1/6W
	RC14	QRD161J-104	CARBON RESISTOR		100K 5% 1/6W
	RC15	QRD161J-2R2	CARBON RESISTOR		2.2 5% 1/6W
	RC16	QRD161J-2R2	CARBON RESISTOR		2.2 5% 1/6W
⚠	RY951	VSK1D09-113	RELAY		
	R951	QRD161J-331	CARBON RESISTOE		330 5% 1/6W
	R952	QRD161J-564	CARBON RESISTOR		560K 5% 1/6W
	R953	QRD161J-101	CARBON RESISTOR		100 5% 1/6W
	R954	QRD161J-104	CARBON RESISTOR		100K 5% 1/6W
	R955	QRD161J-472	CARBON RESISTOR		4.7K 5% 1/6W
	R956	QRD161J-103	CARBON RESISTOR		10K 5% 1/6W
	R957	QRD161J-102	CARBON RESISTOR		1.0K 5% 1/6W
	R958	QRD161J-472	CARBON RESISTOR		4.7K 5% 1/6W
	R960	QRD161J-331	CARBON RESISTOE		330 5% 1/6W
	R961	QRD161J-564	CARBON RESISTOR		560K 5% 1/6W
	R962	QRD161J-151	CARBON RESISTOR		150 5% 1/6W
	R963	QRD161J-104	CARBON RESISTOR		100K 5% 1/6W
	R964	QRD161J-472	CARBON RESISTOR		4.7K 5% 1/6W
	R965	QRD161J-102	CARBON RESISTOR		1.0K 5% 1/6W
	R966	QRD161J-102	CARBON RESISTOR		1.0K 5% 1/6W
	R967	QRD161J-472	CARBON RESISTOR		4.7K 5% 1/6W
	R969	QRD161J-331	CARBON RESISTOE		330 5% 1/6W
	R970	QRD161J-471	CARBON RESISTOR		470 5% 1/6W
	R971	QRD161J-103	CARBON RESISTOR		10K 5% 1/6W
	R972	QRD161J-151	CARBON RESISTOR		150 5% 1/6W
	R973	QRD161J-563	CARBON RESISTOR		56K 5% 1/6W
	R975	QRD161J-224	CARBON RESISTOR		220K 5% 1/6W
	R976	QRD161J-224	CARBON RESISTOR		220K 5% 1/6W
	R978	QRD161J-563	CARBON RESISTOR		56K 5% 1/6W
	R979	QRD161J-563	CARBON RESISTOR		56K 5% 1/6W

⚠	REF.	PARTS NO.	PARTS NAME		REMARKS
	R980	QRD161J-472	CARBON RESISTOR		4.7K 5% 1/6W
⚠	R981	QRD121J-1R0	C RESISTOR		1.0 5% 1/2W
	R982	QRD161J-471	CARBON RESISTOR		470 5% 1/6W
	R983	QRD161J-223	CARBON RESISTOR		22K 5% 1/6W
	R984	QRD161J-102	CARBON RESISTOR		1.0K 5% 1/6W
	R985	QRD161J-101	CARBON RESISTOR		100 5% 1/6W
	R986	QRD161J-151	CARBON RESISTOR		150 5% 1/6W
	R987	QRD161J-472	CARBON RESISTOR		4.7K 5% 1/6W
	R988	QRD161J-472	CARBON RESISTOR		4.7K 5% 1/6W

⚠ parts are safety assurance parts.
When replacing those parts, make sure to use the specified one.

■ Tuner Board Parts List: VMW2278

⚠	REF.	PARTS NO.	PARTS NAME		REMARKS
	BPF	VBP4M3B-005	BP FILTER		
	CF04	CSB456F18	CERA LOCK		
	CN01	VMC0155-011	CONNECTOR		
	CN03	VMC0155-003	CONNECTOR		
	C001	QCS11HJ-200	C CAPACITOR		20PF 5% 50V
	C002	QCBB1HK-102Y	C.CAPACITOR		1000PF 10% 50V
	C003	QCS11HJ-100	C.CAPACITOR		10PF 5% 50V
	C004	QCSB1HK-5R6Y	C CAPACITOR		5.6PF 10% 50V
	C006	QCC11EM-473	C.CAPACITOR		.047MF 20% 25V
	C007	QCT05CH-100	C.CAPACITOR		10PF 5% 50V
	C008	QCT05CH-200	C.CAPACITOR		20PF 5% 50V
	C009	QCT30CH-2R2Y	C.CAPACITOR		2.2PF 5% 50V
	C010	QCT05CH-150	C.CAPACITOR		15PF 5% 50V
	C011	QCC11EM-103	C.CAPACITOR		.010MF 20% 25V
	C012	QCBB1HK-102Y	C.CAPACITOR		1000PF 10% 50V
	C013	QCC11EM-103	C.CAPACITOR		.010MF 20% 25V
	C015	QCVB1CN-103Y	C.CAPACITOR		.010MF 30% 16V
	C016	QCC11EM-223	C.CAPACITOR		.022MF 20% 25V
	C017	QCS11HJ-330	C.CAPACITOR		33PF 5% 50V
	C020	QCC11EM-473	C.CAPACITOR		.047MF 20% 25V
	C021	QFS41HJ-391	P.S.CAPACITOR		390PF 5% 50V
	C022	QCF11HP-103	C.CAPACITOR		.010MF +100:-0% 50V
	C023	QCS11HJ-8R0	C.CAPACITOR		8.0PF 5% 50V
	C024	QETC1HM-104ZN	E.CAPACITOR		.10MF 20% 50V
	C025	QCS11HJ-150	C.CAPACITOR		15PF 5% 50V
	C026	QCS11HJ-221	C.CAPACITOR		220PF 5% 50V
	C027	QCBB1HK-151Y	C.CAPACITOR		150PF 10% 50V
	C028	QCC11EM-473	C.CAPACITOR		.047MF 20% 25V
	C029	QETC1HM-475ZN	E.CAPACITOR		4.7MF 20% 50V
	C030	QETC1AM-107ZN	E.CAPACITOR		100MF 20% 10V
	C031	QCC11EM-473	C.CAPACITOR		.047MF 20% 25V
	C032	QCC11EM-153	C.CAPACITOR		.015MF 20% 25V
	C033	QCBB1HK-331Y	C.CAPACITOR		330PF 10% 50V
	C034	QETC1HM-335ZN	E.CAPACITOR		3.3MF 20% 50V
	C035	QCC11EM-683	C.CAPACITOR		.068MF 20% 25V

⚠	REF.	PARTS NO.	PARTS NAME		REMARKS
	C036	QCC11EM-103	C.CAPACITOR		.010MF 20% 25V
	C037	QCC11EM-103	C.CAPACITOR		.010MF 20% 25V
	C038	QETC1HM-225ZN	E.CAPACITOR		2.2MF 20% 50V
	C039	QETC1HM-104ZN	E.CAPACITOR		.10MF 20% 50V
	C040	QETC1HM-104ZN	E.CAPACITOR		.10MF 20% 50V
	C041	QETCOJM-477ZN	E.CAPACITOR		470MF 20% 6.3V
	C042	VCE0056-479Z	SUPER CAP.		
	C043	QCXB1CM-222Y	C.CAPACITOR		2200PF 20% 16V
	C045	QCC11EM-223	C.CAPACITOR		.022MF 20% 25V
	C046	QCBB1HK-151Y	C.CAPACITOR		150PF 10% 50V
	C047	QCC11EM-473	C.CAPACITOR		.047MF 20% 25V
	C048	QETC1HM-105ZN	E.CAPACITOR		1.0MF 20% 50V
	C049	QETC1HM-105ZN	E.CAPACITOR		1.0MF 20% 50V
	C050	QCBB1HK-151Y	C.CAPACITOR		150PF 10% 50V
	C051	QCVB1CN-103Y	C.CAPACITOR		.010MF 30% 16V
	C052	QCVB1CN-103Y	C.CAPACITOR		.010MF 30% 16V
	C053	QCS11HJ-390	C.CAPACITOR		39PF 5% 50V
	C055	QETC1HM-104ZN	E.CAPACITOR		.10MF 20% 50V
	C056	QCBB1HK-151Y	C.CAPACITOR		150PF 10% 50V
	C058	QCBB1HK-151Y	C.CAPACITOR		150PF 10% 50V
	C059	QCC11EM-473	C.CAPACITOR		.047MF 20% 25V
	C060	QCC11EM-473	C.CAPACITOR		.047MF 20% 25V
	C061	QCT30CH-2R2Y	C.CAPACITOR		2.2PF 5% 50V
	C065	QCBB1HK-151Y	C.CAPACITOR		150PF 10% 50V
	C066	QCBB1HK-151Y	C.CAPACITOR		150PF 10% 50V
	D001	KV1330	VARI CAP		
	D002	KV1330	VARI CAP		
	D003	KV1330	VARI CAP		
	D004	KV1330	VARI CAP		
	D005	MA165	SI.DIODE		
	D006	MA165	VARI CAP		
	D007	MA165	SI.DIODE		
	D008	KV1250	VARI CAP		
	D009	KV1250	VARI CAP		
	D010	KV1250	VARI CAP		
	D011	KV1250	VARI CAP		
	D012	11E1-F	SI DIODE		
	D015	MA165	SI.DIODE		
	D016	MA4043(M)	Z DIODE		
	D017	MA165	SI.DIODE		
	D018	MA165	SI.DIODE		
	IC01	TA7358P(N)	IC		
	IC02	TA8132AN	IC		
	L001	V03105-029	OSC COIL		
	L002	VQF1B12-003	RF COIL		
	L003	VQB010B-506	BAR ANTENA		
	L004	VQB010B-506	BAR ANTENA		
	L005	VQM7U02-403	OSC COIL(MW)		
	L006	VQL7U02-501	OSC COIL(LW)		
	L009	V03047-17	COIL		

⚠	REF.	PARTS NO.	PARTS NAME		REMARKS
	Q001	2SC1923	TRANSISTOR		
	Q002	2SC1923	TRANSISTOR		
	Q003	2SC2785	TRANSISTOR		
	Q004	2SC2785	TRANSISTOR		
	Q005	2SC2785	TRANSISTOR		
	Q006	2SC2785	TRANSISTOR		
	Q008	2SA564	TRANSISTOR		
	Q009	2SA564	TRANSISTOR		
	Q010	2SC2785	TRANSISTOR		
	Q011	2SA564	TRANSISTOR		
	Q012	2SC2785	TRANSISTOR		
	Q013	2SD1302(S,T)	TR.I M		
	Q014	2SA564	TRANSISTOR		
	R001	QRD161J-104	C.RESISTOR		100K 5% 1/6W
	R002	QRD161J-103	C.RESISTOR		10K 5% 1/6W
	R003	QRD161J-100	C RESISTOR		10 5% 1/6W
	R004	QRD161J-102	C.RESISTOR		1.0K 5% 1/6W
	R005	QRD161J-823	C RESISTOR		82K 5% 1/6W
	R006	QRD161J-102	C.RESISTOR		1.0K 5% 1/6W
	R008	QRD161J-181	C RESISTOR		180 5% 1/6W
	R009	QRD161J-102	C.RESISTOR		1.0K 5% 1/6W
	R010	QRD161J-104	C.RESISTOR		100K 5% 1/6W
	R011	QRD161J-104	C.RESISTOR		100K 5% 1/6W
	R012	QRD161J-103	C.RESISTOR		10K 5% 1/6W
	R013	QRD161J-103	C.RESISTOR		10K 5% 1/6W
	R015	QRD161J-103	C.RESISTOR		10K 5% 1/6W
	R016	QRD161J-104	C.RESISTOR		100K 5% 1/6W
	R018	QRD161J-103	C.RESISTOR		10K 5% 1/6W
	R019	QRD161J-103	C.RESISTOR		10K 5% 1/6W
	R020	QRD161J-103	C.RESISTOR		10K 5% 1/6W
	R021	QRD161J-104	C.RESISTOR		100K 5% 1/6W
	R022	QRD161J-103	C.RESISTOR		10K 5% 1/6W
	R023	QRD161J-103	C.RESISTOR		10K 5% 1/6W
	R024	QRD161J-103	C.RESISTOR		10K 5% 1/6W
	R025	QRD161J-822	C.RESISTOR		8.2K 5% 1/6W
	R026	QRD161J-822	C.RESISTOR		8.2K 5% 1/6W
	R027	QRD161J-103	C.RESISTOR		10K 5% 1/6W
	R028	QRD143J-220S	CARBON RESISTOR		22 5% 1/4W
	R029	QRD161J-331	C.RESISTOR		330 5% 1/6W
	R030	QRD161J-103	C.RESISTOR		10K 5% 1/6W
	R031	QRD161J-154	C RESISTOR		150K 5% 1/6W
	R032	QRD161J-331	C.RESISTOR		330 5% 1/6W
	R035	QRD161J-152	C.RESISTOR		1.5K 5% 1/6W
	R037	QRD161J-104	C.RESISTOR		100K 5% 1/6W
	R038	QRD161J-223	C.RESISTOR		22K 5% 1/6W
	R039	QRD161J-103	C.RESISTOR		10K 5% 1/6W
	R040	QRD161J-822	C.RESISTOR		8.2K 5% 1/6W
	R041	QRD161J-103	C.RESISTOR		10K 5% 1/6W
	R043	QRD161J-103	C.RESISTOR		10K 5% 1/6W
	R044	QRD161J-104	C.RESISTOR		100K 5% 1/6W

⚠	REF.	PARTS NO.	PARTS NAME		REMARKS
	R045	QRD161J-104	C.RESISTOR		100K 5% 1/6W
	R046	QRD161J-683	C.RESISTOR		68K 5% 1/6W
	R047	QRD161J-472	C.RESISTOR		4.7K 5% 1/6W
	R048	QRD161J-102	C.RESISTOR		1.0K 5% 1/6W
	R049	QRD161J-102	C.RESISTOR		1.0K 5% 1/6W
	R052	QRD143J-222S	CARBON RESISTOR		2.2K 5% 1/4W
	R053	QRD161J-102	CARBON RESISTOR		1.0K 5% 1/6W
	R054	QRD161J-274	CARBON RESISTOR		270K 5% 1/6W
	TC01	QAT3001-053	T CAPACITOR		QAT3620-100M
	TC02	QAT3001-053	T CAPACITOR		QAT3620-100M
	TC03	QAT3001-053	T CAPACITOR		QAT3620-100M
	TC04	QAT3620-200M	T.CAPACITOR		
	CF01,02	VCF2L3B-105	C. FILTER		
	CF03	VCF1Z2Z-104	C. FILTER		
	T001	VQT7F12-111	IFT		
	T002	VQT7A21-105	IFT		

■ DTS (Digital Tuning System) Board Parts List: VMW1232

⚠ parts are safety assurance parts.
When replacing those parts, make sure to use the specified one.

⚠	REF.	PARTS NO.	PARTS NAME		REMARKS
	CS03	QCC11EM-473	C.CAPACITOR		.047MF 20% 25V
	CS04	QCVB1CM-103Y	C.CAPACITOR		.010MF 20% 16V
	CS05	QCS11HJ-360	C CAPACITOR		36PF 5% 50V
	CS06	QCT05CH-220	C CAPACITOR		22PF 5% 50V
	CS07	QFV41HJ-224	TF CAPACITOR		.22MF 5% 50V
	CS08	QCVB1CM-103Y	C.CAPACITOR		.010MF 20% 16V
	CS09	QCXB1CM-222Y	C.CAPACITOR		2200PF 20% 16V
	CS10	QER41HM-225	E CAPACITOR		2.2MF 20% 50V
	CS11	QCVB1CM-103Y	C.CAPACITOR		.010MF 20% 16V
	CS13	QCBB1HK-331Y	C.CAPACITOR		330PF 10% 50V
	CS14	QCC11EM-473	C.CAPACITOR		.047MF 20% 25V
	CS17	QCBB1HK-151Y	C.CAPACITOR		150PF 10% 50V
	CS18	QCBB1HK-102Y	C.CAPACITOR		1000PF 10% 50V
	CS20	QCC11EM-473	C.CAPACITOR		.047MF 20% 25V
	CS21	QCBB1HK-151Y	C.CAPACITOR		150PF 10% 50V
	CS23	QCBB1HK-151Y	C.CAPACITOR		150PF 10% 50V
	CS24	QER40GM-476VM	E CAPACITOR		47MF 20%
	DS01	MA165	SI.DIODE		
	DS02	MA165	SI.DIODE		
	DS03	MA165	SI.DIODE		
	DS04	MA165	SI.DIODE		
	DS05	MA165	SI.DIODE		
	DS06	MA165	SI.DIODE		
	DS07	MA165	SI.DIODE		
	IC S1	UPD1713AG-620	IC		
	LCD	VGL1035-002	LCD		
	LS01	VQP0012-471	INDUCTOR		
	LS02	VQP0012-471	INDUCTOR		

⚠	REF.	PARTS NO.	PARTS NAME		REMARKS
	QS01	2SA1317	TRANSISTOR		
	QS02	2SC2785	TRANSISTOR		
	QS03	2SC2785	TRANSISTOR		
	QS04	2SA1317	TRANSISTOR		
	RS01	QRD161J-223	C.RESISTOR		22K 5% 1/6W
	RS02	QRD161J-152	CARBON RESISTOR		1.5K 5% 1/6W
	RS03	QRD161J-223	CARBON RESISTOR		22K 5% 1/6W
	RS04	QRD161J-223	CARBON RESISTOR		22K 5% 1/6W
	RS05	QRD161J-392	CARBON RESISTOR		3.9K 5% 1/6W
	RS06	QRD161J-152	CARBON RESISTOR		1.5K 5% 1/6W
	RS07	QRD161J-222	CARBON RESISTOR		2.2K 5% 1/6W
	RS08	QRD161J-222	CARBON RESISTOR		2.2K 5% 1/6W
	RS09	QRD161J-471	CARBON RESISTOR		470 5% 1/6W
	RS10	QRD161J-474	CARBON RESISTOR		470K 5% 1/6W
	RS11	QRD161J-223	C.RESISTOR		22K 5% 1/6W
	RS12	QRD161J-223	C.RESISTOR		22K 5% 1/6W
	RS13	QRD161J-473	CARBON RESISTOR		47K 5% 1/6W
	RS14	QRD161J-102	CARBON RESISTOR		1.0K 5% 1/6W
	RS15	QRD161J-223	CARBON RESISTOR		22K 5% 1/6W
	RS16	QRD161J-102	CARBON RESISTOR		1.0K 5% 1/6W
	RS17	QRD161J-223	CARBON RESISTOR		22K 5% 1/6W
	RS18	QRD161J-223	CARBON RESISTOR		22K 5% 1/6W
	SS01	QSP4H11-V05Z	TACT SWITCH		
	SS02	QSP4H11-V05Z	TACT SWITCH		
	SS03	QSP4H11-V05Z	TACT SWITCH		
	SS04	QSP4H11-V05Z	TACT SWITCH		
	SS05	QSP4H11-V05Z	TACT SWITCH		
	SS06	QSP4H11-V05Z	TACT SWITCH		
	SS07	QSP4H11-V05Z	TACT SWITCH		
	SS08	QSP4H11-V05Z	TACT SWITCH		
	X	V472124-A0	CRYSTAL		

■ Power Supply Board Parts List: VMW2285

⚠ parts are safety assurance parts.
When replacing those parts, make sure to use the specified one.

⚠	REF.	PARTS NO.	PARTS NAME		REMARKS
	CN991	VMC0155-005	CONNECTOR		
	C991	QFV41HJ-104	TF.CAPACITOR		.10MF 5% 50V
	C992	QFV41HJ-104	TF.CAPACITOR		.10MF 5% 50V
	C993	QFV41HJ-104	TF.CAPACITOR		.10MF 5% 50V
	C994	QFV41HJ-104	TF.CAPACITOR		.10MF 5% 50V
	C995	QCC11EM-683	C.CAPACITOR		.068MF 20% 25V
	C996	QCC11EM-683	C.CAPACITOR		.068MF 20% 25V
	C997	QCC11EM-683	C.CAPACITOR		.068MF 20% 25V
	C998	QCC11EM-683	C.CAPACITOR		.068MF 20% 25V
⚠	D991	S4VB10-4001	SI DIODE		
⚠	D992	S4VB10-4001	SI DIODE		
⚠	J991	QMC0263-004	AC SOCKET		
⚠	S991	QSS2325-115	SLIDE SW		

■ CD Operation/Timer Board Parts List: VMW1227

⚠ parts are safety assurance parts.
When replacing those parts, make sure to use the specified one.

⚠	REF.	PARTS NO.	PARTS NAME		REMARKS
	CN371	VMC0063-002	CONNECTOR		
	CT51	QCVB1CM-103Y	C.CAPACITOR		.010MF 20% 16V
	CT52	QCVB1CM-103Y	C.CAPACITOR		.010MF 20% 16V
	CT53	QER41HM-105	E CAPACITOR		1.0MF 20% 50V
	CT54	QER41HM-105	E.CAPACITOR		1.0MF 20% 50V
	CT55	QCS11HJ-220	C.CAPACITOR		22PF 5% 50V
	CT56	QCS11HJ-220	C.CAPACITOR		22PF 5% 50V
	CT57	QER61CM-336ZM	E CAPACITOR		33MF 20% 16V
	CT58	QCVB1CM-103Y	C.CAPACITOR		.010MF 20% 16V
	CT59	QCVB1CM-103Y	C.CAPACITOR		.010MF 20% 16V
	CT60	QCVB1CM-103Y	C.CAPACITOR		.010MF 20% 16V
	C355	QFN41HJ-332	M.CAPACITOR		3300PF 5% 50V
	C356	QFN41HJ-122	M.CAPACITOR		1200PF 5% 50V
	DT51	MA165	SI.DIODE		
	DT52	MA165	SI.DIODE		
	DT53	GL8EG22	LED		
	DT54	GL8EG22	LED		
	D359	LR-1140VC	L.E.D.		
	D360	LR-1140VC	L.E.D.		
	D362	LN219RP	LED		
	ICT51	LR3441	I.C.		
	J352	QMS3507-001H	JACK		
	LCT51	VGL1078-101			
	RT51	QRD161J-102	CARBON RESISTOR		1.0K 5% 1/6W
	RT53	QRD161J-102	CARBON RESISTOR		1.0K 5% 1/6W
	RT54	QRD161J-155	CARBON RESISTOR		1.5M 5% 1/6W
	RT55	QRD161J-561	CARBON RESISTOR		560 5% 1/6W
	RZ01	QRD161J-561	CARBON RESISTOR		560 5% 1/6W
	RZ02	QRD161J-561	CARBON RESISTOR		560 5% 1/6W
	ST53	QSP4H11-V06Z	TACT SW		
	ST54	QSP4H11-V06Z	TACT SW		
	ST55	QSP4H11-V06Z	TACT SW		
	ST56	QSP4H11-V06Z	TACT SW		
	S351	QSP2256-001	P.SWITCH		
	S352	VST0024-001M	P.SWITCH		
	S360	QSS7A23-V09	SLIDE SW		
	S701	QSP4H11-V06Z	TACT SW		
	S702	QSP4H11-V06Z	TACT SW		
	S703	QSP4H11-V06Z	TACT SW		
	S704	QSP4H11-V06Z	TACT SW		
	S705	QSP4H11-V06Z	TACT SW		
	S706	VSH1153-001	SWITCH.		
	VR105	VCV1001-051	VR WITH MOTOR		
	VR205	VCV1001-051	VR WITH MOTOR		
	XT51	VCX5000-001	CRYSTAL		

■ CD Amplifier Board Parts List: VMW2300

⚠ parts are safety assurance parts.
When replacing those parts, make sure to use the specified one.

⚠	REF.	PARTS NO.	PARTS NAME		REMARKS
	CN501	VMC0075-010	CONNECTOR		
	CN502	VMC0040-006	CONNECTOR		
	CN503	VMC0075-004	CONNECTOR		
	CN504	VMC0162-012	CONNECTOR		
	C502	QETC1AM-476ZN	E.CAPACITOR		47MF 20% 10V
	C505	QCBB1HK-471Y	C.CAPACITOR		470PF 10% 50V
	C506	QCC11EM-223	C.CAPACITOR		.022MF 20% 25V
	C507	QCS11HJ-680	C.CAPACITOR		68PF 5% 50V
	C508	QETC1AM-476ZN	E.CAPACITOR		47MF 20% 10V
	C509	QCS11HJ-680	C.CAPACITOR		68PF 5% 50V
	C510	QCSB1HK-2R2Y	C.CAPACITOR		2.2PF 10% 50V
	C511	QCC11EM-223	C.CAPACITOR		.022MF 20% 25V
	C512	QCS11HJ-220	C.CAPACITOR		22PF 5% 50V
	C513	QCBB1HK-820Y	C CAPACITOR		82PF 10% 50V
	C514	QCVB1CM-103Y	C.CAPACITOR		.010MF 20% 16V
	C515	QCC11EM-473	C.CAPACITOR		.047MF 20% 25V
	C516	QCS11HJ-470	C CAPACITOR		47PF 5% 50V
	C517	QCBB1HK-151Y	C.CAPACITOR		150PF 10% 50V
	C518	QCBB1HK-101Y	C.CAPACITOR		100PF 10% 50V
	C519	QCS11HJ-330	C.CAPACITOR		33PF 5% 50V
	C521	QETC1AM-476ZN	E.CAPACITOR		47MF 20% 10V
	C522	QCS11HJ-680	C.CAPACITOR		68PF 5% 50V
	C523	QCS11HJ-680	C.CAPACITOR		68PF 5% 50V
	C525	QETC1EM-475ZN	E.CAPACITOR		4.7MF 20% 25V
	C526	QETC1AM-476ZN	E.CAPACITOR		47MF 20% 10V
	C527	QEN61HR-105ZN	NP E.CAPACITOR		1.0MF +30:-10% 50V
	C528	QFV41HJ-123	TF CAPACITOR		.012MF 5% 50V
	C529	QFV41HJ-333	TF.CAPACITOR		.033MF 5% 50V
	C531	QCY41HK-822	C.CAPACITOR		8200PF 10% 50V
	C535	QFV41HJ-473	TF.CAPACITOR		.047MF 5% 50V
	C544	QCS11HJ-100	C CAPACITOR		10PF 5% 50V
	C545	QCS11HJ-100	C CAPACITOR		10PF 5% 50V
	C546	QCS11HJ-470	C CAPACITOR		47PF 5% 50V
	C547	QCC11EM-473	C.CAPACITOR		.047MF 20% 25V
	C548	QETC1AM-476ZN	E.CAPACITOR		47MF 20% 10V
	C549	QCC11EM-473	C.CAPACITOR		.047MF 20% 25V
	C550	QETC1AM-476ZN	E.CAPACITOR		47MF 20% 10V
	C551	QETC1AM-476ZN	E.CAPACITOR		47MF 20% 10V
	C552	QCC11EM-104	C.CAPACITOR		.10MF 20% 25V
	C557	QCBB1HK-331Y	C.CAPACITOR		330PF 10% 50V
	C563	QFV41HJ-123	TF CAPACITOR		.012MF 5% 50V
	C587	QCS11HJ-470	C CAPACITOR		47PF 5% 50V
	C591	QCC11EM-223	C.CAPACITOR		.022MF 20% 25V
	C604	QETC1AM-226ZN	E.CAPACITOR		22MF 20% 10V
	C605	QETC1AM-226ZN	E.CAPACITOR		22MF 20% 10V
	C606	QCXB1CM-182Y	C CAPACITOR		1800PF 20% 16V
	C607	QCXB1CM-182Y	C CAPACITOR		1800PF 20% 16V
	C608	QCXB1CM-152Y	C.CAPACITOR		1500PF 20% 16V
	C609	QCXB1CM-152Y	C.CAPACITOR		1500PF 20% 16V
	C610	QCBB1HK-121Y	C.CAPACITOR		120PF 10% 50V

⚠	REF.	PARTS NO.	PARTS NAME		REMARKS
	C611	QCBB1HK-121Y	C.CAPACITOR		120PF 10% 50V
	C612	QETC1AM-226ZN	E.CAPACITOR		22MF 20% 10V
	C613	QETC1AM-226ZN	E.CAPACITOR		22MF 20% 10V
	C614	QCC11EM-123	C.CAPACITOR		.012MF 20% 25V
	C615	QCC11EM-123	C.CAPACITOR		.012MF 20% 25V
	C616	QETC1AM-107ZN	E.CAPACITOR		100MF 20% 10V
	C617	QETC1AM-107ZN	E.CAPACITOR		100MF 20% 10V
	C618	QCC11EM-223	C.CAPACITOR		.022MF 20% 25V
	C620	QETC1AM-107ZN	E.CAPACITOR		100MF 20% 10V
	C621	QETC1AM-477ZN	E.CAPACITOR		470MF 20% 10V
	C622	QETC1AM-476ZN	E.CAPACITOR		47MF 20% 10V
	D610	HZS5.6EB3	Z DIODE		
	IC501	TA8101F	IC		
	IC502	NJM3403D-C	IC		
	IC503	M5223L	IC		
	IC504	M5223L	IC		
	IC505	BA10355N	IC		
	IC602	TC9201BF	IC		
	IC603	TC9200BF	IC		
	IC604	CXK5816PN-15L	16K SRAM		
	IC605	SM5807FP	IC		
	IC606	UPD6372CX	IC		
	IC607	BA15218N	IC		
	Q501	2SA1175	TRANSISTOR		
	Q503	2SC1685(Q,R)	TR.I.M		
	Q504	2SC1685(Q,R)	TR.I.M		
	Q505	2SA1175	TRANSISTOR		
⚠	Q614	2SD471(KA)	T R		
	Q634	2SD471(KA)	T R		
	Q635	2SB772(Q,P)	TRANSISTOR		
	Q636	2SD1302(S,T)	TR.I M		
	Q637	2SA952(L,K)	TRANSISTOR		
	Q638	2SD1302(S,T)	TR.I M		
	Q639	2SA952(L,K)	TRANSISTOR		
	Q640	2SD1302(S,T)	TR.I M		
	Q641	2SA952(L,K)	TRANSISTOR		
	Q642	2SD1302(S,T)	TR.I M		
	Q643	2SA952(L,K)	TRANSISTOR		
	R501	QRD161J-184	CARBON RESISTOR		180K 5% 1/6W
	R502	QRD161J-124	CARBON RESISTOR		120K 5% 1/6W
	R503	QRD161J-682	CARBON RESISTOR		6.8K 5% 1/6W
	R504	QRD161J-472	CARBON RESISTOR		4.7K 5% 1/6W
	R505	QRD161J-102	CARBON RESISTOR		1.0K 5% 1/6W
	R506	QRD161J-681	CARBON RESISTOR		680 5% 1/6W
	R507	QRD161J-104	CARBON RESISTOR		100K 5% 1/6W
	R508	QRD161J-273	CARBON RESISTOR		27K 5% 1/6W
	R509	QRD161J-222	CARBON RESISTOR		2.2K 5% 1/6W
	R510	QRD161J-103	CARBON RESISTOR		10K 5% 1/6W
	R511	QRD161J-103	CARBON RESISTOR		10K 5% 1/6W
	R512	QRD161J-682	CARBON RESISTOR		6.8K 5% 1/6W

⚠	REF.	PARTS NO.	PARTS NAME		REMARKS
	R513	QRD161J-472	CARBON RESISTOR		4.7K 5% 1/6W
	R514	QRD161J-104	CARBON RESISTOR		100K 5% 1/6W
	R515	QRD161J-223	CARBON RESISTOR		22K 5% 1/6W
	R517	QRD161J-822	CARBON RESISTOR		8.2K 5% 1/6W
	R519	QRD161J-683	CARBON RESISTOR		68K 5% 1/6W
	R520	QRV141F-3302AY	CMF RESISTOR		33 1/4W
	R521	QRD161J-683	CARBON RESISTOR		68K 5% 1/6W
	R522	QRD161J-102	CARBON RESISTOR		1.0K 5% 1/6W
	R523	QRD161J-562	CARBON RESISTOR		5.6K 5% 1/6W
	R524	QRD161J-152	CARBON RESISTOR		1.5K 5% 1/6W
	R525	QRD161J-273	CARBON RESISTOR		27K 5% 1/6W
	R526	QRD161J-682	CARBON RESISTOR		6.8K 5% 1/6W
	R527	QRD161J-684	CARBON RESISTOR		680K 5% 1/6W
	R528	QRD161J-153	CARBON RESISTOR		15K 5% 1/6W
	R529	QRD161J-123	CARBON RESISTOR		12K 5% 1/6W
	R530	QRD161J-103	CARBON RESISTOR		10K 5% 1/6W
	R531	QRD161J-102	CARBON RESISTOR		1.0K 5% 1/6W
	R532	QRD161J-153	CARBON RESISTOR		15K 5% 1/6W
	R533	QRD161J-103	CARBON RESISTOR		10K 5% 1/6W
	R534	QRD161J-102	CARBON RESISTOR		1.0K 5% 1/6W
	R535	QRD161J-272	CARBON RESISTOR		2.7K 5% 1/6W
	R536	QRD161J-104	CARBON RESISTOR		100K 5% 1/6W
	R537	QRD161J-563	CARBON RESISTOR		56K 5% 1/6W
	R538	QRD161J-103	CARBON RESISTOR		10K 5% 1/6W
	R539	QRD161J-273	CARBON RESISTOR		27K 5% 1/6W
	R540	QRD161J-123	CARBON RESISTOR		12K 5% 1/6W
	R541	QRD161J-473	CARBON RESISTOR		47K 5% 1/6W
	R542	QRD161J-273	CARBON RESISTOR		27K 5% 1/6W
	R543	QRD161J-103	CARBON RESISTOR		10K 5% 1/6W
	R544	QRD161J-392	CARBON RESISTOR		3.9K 5% 1/6W
	R545	QRD161J-103	CARBON RESISTOR		10K 5% 1/6W
	R546	QRD161J-104	CARBON RESISTOR		100K 5% 1/6W
	R547	QRD161J-473	CARBON RESISTOR		47K 5% 1/6W
	R548	QRD161J-333	CARBON RESISTOR		33K 5% 1/6W
	R549	QRD161J-181	CARBON RESISTOR		180 5% 1/6W
	R550	QRD161J-103	CARBON RESISTOR		10K 5% 1/6W
	R559	QRD161J-103	CARBON RESISTOR		10K 5% 1/6W
	R560	QRD161J-103	CARBON RESISTOR		10K 5% 1/6W
	R566	QRD161J-561	CARBON RESISTOR		560 5% 1/6W
	R570	QRD161J-103	CARBON RESISTOR		10K 5% 1/6W
	R573	QRD161J-183	CARBON RESISTOR		18K 5% 1/6W
	R640	QRD161J-681	CARBON RESISTOR		680 5% 1/6W
	R641	QRD161J-221	CARBON RESISTOR		220 5% 1/6W
	R644	QRD161J-102	CARBON RESISTOR		1.0K 5% 1/6W
	R646	QRD161J-151	CARBON RESISTOR		150 5% 1/6W
	R647	QRD161J-102	CARBON RESISTOR		1.0K 5% 1/6W
	R649	QRD161J-102	CARBON RESISTOR		1.0K 5% 1/6W
	R660	QRD161J-182	CARBON RESISTOR		1.8K 5% 1/6W
	R661	QRD161J-182	CARBON RESISTOR		1.8K 5% 1/6W
	R662	QRD161J-103	CARBON RESISTOR		10K 5% 1/6W

⚠	REF.	PARTS NO.	PARTS NAME		REMARKS
	R663	QRD161J-103	CARBON RESISTOR		10K 5% 1/6W
	R664	QRD161J-392	CARBON RESISTOR		3.9K 5% 1/6W
	R665	QRD161J-392	CARBON RESISTOR		3.9K 5% 1/6W
	R666	QRD161J-223	CARBON RESISTOR		22K 5% 1/6W
	R667	QRD161J-223	CARBON RESISTOR		22K 5% 1/6W
	R668	QRD161J-332	CARBON RESISTOR		3.3K 5% 1/6W
	R669	QRD161J-332	CARBON RESISTOR		3.3K 5% 1/6W
	R672	QRD161J-122	CARBON RESISTOR		1.2K 5% 1/6W
	R673	QRD161J-122	CARBON RESISTOR		1.2K 5% 1/6W
	R675	QRD161J-470	CARBON RESISTOR		47 5% 1/6W
	R676	QRV141F-8202AY	CMF RESISTOR		82 1/4W
	R677	QRD161J-683	CARBON RESISTOR		68K 5% 1/6W
	R678	QRV141F-3302AY	CMF RESISTOR		33 1/4W
	R679	QRD161J-103	CARBON RESISTOR		10K 5% 1/6W
	R680	QRD161J-470	CARBON RESISTOR		47 5% 1/6W
	R681	QRV141F-8202AY	CMF RESISTOR		82 1/4W
	R682	QRV141F-3302AY	CMF RESISTOR		33 1/4W
	R683	QRD161J-470	CARBON RESISTOR		47 5% 1/6W
	R684	QRV141F-8202AY	CMF RESISTOR		82 1/4W
	R685	QRD161J-683	CARBON RESISTOR		68K 5% 1/6W
	R686	QRV141F-3302AY	CMF RESISTOR		33 1/4W
	R687	QRD161J-103	CARBON RESISTOR		10K 5% 1/6W
	R688	QRD161J-103	CARBON RESISTOR		10K 5% 1/6W
	R689	QRD161J-103	CARBON RESISTOR		10K 5% 1/6W
	R690	QRD161J-470	CARBON RESISTOR		47 5% 1/6W
	R691	QRV141F-8202AY	CMF RESISTOR		82 1/4W
	R692	QRD161J-224	CARBON RESISTOR		220K 5% 1/6W
	R693	QRD161J-824	CARBON RESISTOR		820K 5% 1/6W
	R694	QRD161J-470	CARBON RESISTOR		47 5% 1/6W
	R695	QRV141F-8202AY	CMF RESISTOR		82 1/4W
	R696	QRD161J-683	CARBON RESISTOR		68K 5% 1/6W
	R697	QRV141F-3302AY	CMF RESISTOR		33 1/4W
	R698	QRD161J-273	CARBON RESISTOR		27K 5% 1/6W
⚠	R699	QRZ0077-4R7X	F.RES.I.M		4.7 1/0W
	VR501	QVPA603-104	SEMI.V.RESISTOR		
	X601	VCX5016-934V	CRYSTAL		

■ CD Changer Control Board Parts List: VMW1231

⚠ parts are safety assurance parts.
When replacing those parts, make sure to use the specified one.

⚠	REF.	PARTS NO.	PARTS NAME		REMARKS
	CF701	EFO-GC8004T4	CERAMIC RESONAT		
	CN704	E04365-005S	CONNECTOR		
	CN705	VMC0162-012	CONNECTOR		
	CN707	VMC0063-002	CONNECTOR		
	CN708	E04365-007S	***CONNECTOR		
	C701	QCC11EM-104	C.CAPACITOR		.10MF 20% 25V
	C702	QETC1AM-107ZN	E.CAPACITOR		100MF 20% 10V
	C705	QETC1AM-476ZN	E.CAPACITOR		47MF 20% 10V
	C706	QETC1AM-477ZN	E.CAPACITOR		470MF 20% 10V
	C707	QCBB1HK-681Y	C.CAPACITOR		680PF 10% 50V
	C708	QCC11EM-104	C.CAPACITOR		.10MF 20% 25V
	C709	QER41EM-475	E CAPACITOR		4.7MF 20% 25V
	C710	QERF1AM-476ZM	E CAPACITOR		47MF 20% 10V
	C711	QETC1HM-475ZN	E.CAPACITOR		4.7MF 20% 50V
	D701	MA165	SI.DIODE		
	D702	MA165	SI.DIODE		
	D703	MA165	SI.DIODE		
	D704	MA165	SI.DIODE		
	D705	11E1	SI.DIODE		
	D706	11E1	SI.DIODE		
	D707	11E1	SI.DIODE		
	D708	11E1	SI.DIODE		
	IC701	MN178122JCA-1	IC(MICON)		
	IC702	MN1280(R)	IC		
	IC703	TA7288P	IC		
	IC704	LC7582A	IC		
	IC705	SBX1492-01	RM RECIVER		
	LC701	VGL1076-001	LCD		
	PL701	VGZ0001-028V	P.LAMP		
	PL702	VGZ0001-028V	P.LAMP		
	PL703	VGZ0001-028V	P.LAMP		
	Q701	2SC1685(Q,R)	TR.I.M		
	Q702	2SC1685(Q,R)	TR.I.M		
	Q706	2SA1175	TRANSISTOR		
	Q707	2SA1175	TRANSISTOR		
	Q708	2SC1685(Q,R)	TR.I.M		
	Q709	2SC1685(Q,R)	TR.I.M		
	RN701	QRB075J-473	N RESISTOR		47K 5% 1/7W
	R701	QRD161J-221	CARBON RESISTOR		220 5% 1/6W
	R702	QRD161J-103	CARBON RESISTOR		10K 5% 1/6W
	R703	QRD161J-473	CARBON RESISTOR		47K 5% 1/6W
	R704	QRD161J-473	CARBON RESISTOR		47K 5% 1/6W
	R705	QRD161J-822	CARBON RESISTOR		8.2K 5% 1/6W
	R706	QRD161J-471	CARBON RESISTOR		470 5% 1/6W
	R707	QRD161J-473	CARBON RESISTOR		47K 5% 1/6W
	R708	QRD161J-473	CARBON RESISTOR		47K 5% 1/6W
	R709	QRX019J-2R2A	MF RESISTOR		2.2 5% 1/1W
	R710	QRX019J-2R2A	MF RESISTOR		2.2 5% 1/1W
	R711	QRD161J-221	CARBON RESISTOR		220 5% 1/6W
	R712	QRD161J-221	CARBON RESISTOR		220 5% 1/6W

⚠	REF.	PARTS NO.	PARTS NAME		REMARKS
	R713	QRD161J-221	CARBON RESISTOR		220 5% 1/6W
	R714	QRD161J-221	CARBON RESISTOR		220 5% 1/6W
	R715	QRD161J-221	CARBON RESISTOR		220 5% 1/6W
	R716	QRD161J-103	CARBON RESISTOR		10K 5% 1/6W
	R718	QRD161J-103	CARBON RESISTOR		10K 5% 1/6W
	R719	QRD161J-103	CARBON RESISTOR		10K 5% 1/6W
	R720	QRD161J-103	CARBON RESISTOR		10K 5% 1/6W
	R721	QRD161J-222	CARBON RESISTOR		2.2K 5% 1/6W
	R722	QRD161J-222	CARBON RESISTOR		2.2K 5% 1/6W
	R723	QRD161J-222	CARBON RESISTOR		2.2K 5% 1/6W
	R724	QRD161J-473	CARBON RESISTOR		47K 5% 1/6W
	R725	QRD161J-154	CARBON RESISTOR		150K 5% 1/6W
	R726	QRD161J-102	CARBON RESISTOR		1.0K 5% 1/6W
	R727	QRD161J-473	CARBON RESISTOR		47K 5% 1/6W
	R728	QRD161J-473	CARBON RESISTOR		47K 5% 1/6W
	R729	QRD161J-102	CARBON RESISTOR		1.0K 5% 1/6W
	R730	QRD161J-102	CARBON RESISTOR		1.0K 5% 1/6W
	R731	QRD161J-102	CARBON RESISTOR		1.0K 5% 1/6W

JVC

VICTOR COMPANY OF JAPAN, LIMITED
AUDIO PRODUCTS DIVISION MAEBASHI PLANT 10-1, 1-chome, Ohwatari-machi, Maebashi-city, Japan

Printed in Ja
—H0205—